Innovations

Innovations from all technology areas.

THE KNOW-HOW FACTORY

www.zimmer-group.com

ZIMMER group

THE KNOW-HOW FACTORY

ZIMMER GROUP
COMMITTED TO OUR CUSTOMERS

WE HAVE SUCCEEDED FOR YEARS BY OFFERING OUR CUSTOMERS INNOVATIVE AND INDIVIDUALIZED SOLUTIONS. ZIMMER HAS GROWN CONTINUOUSLY AND TODAY WE REACHED A NEW MILESTONE: THE ESTABLISHMENT OF THE KNOW-HOW FACTORY. IS THERE A SECRET TO OUR SUCCESS?

Foundation. Excellent products and services have always been the foundation of our company's growth. Zimmer is a source of advanced solutions and important technical innovations. This is why customers with high expectations for technology frequently find their way to us. When things get tricky, Zimmer Group is in its best form.

Style. We have an interdisciplinary approach to everything we do, resulting in refined process solutions in six areas of technology. This applies not just to development but also to production. Zimmer Group serves all industries and stands ready to resolve even the most unique and highly individualized problems. Worldwide.

Motivation. Customer orientation is perhaps the most important factor of our success. We are a service provider in the complete sense of the word. Even our decision to identify ourselves as Zimmer Group reflects this reality. With Zimmer Group, our customers now have a single, centralized contact for all of their needs. We approach each customer's situation with a high level of competence and a broad range of possible solutions.

THE KNOW-HOW FACTORY
WORDLWIDE

1 Headquarters
Germany

6 Production sites
Germany (3x), Bulgaria, China, India

19 Sales branches
Austria, Benelux, Brazil, Bulgaria, Canada, China, France, India, Italy, Mexico, Poland, Switzerland, Singapore, Slovakia, Scandinavia, Spain, South Korea, United Kingdom, USA

110 Dealers and partners
Worldwide

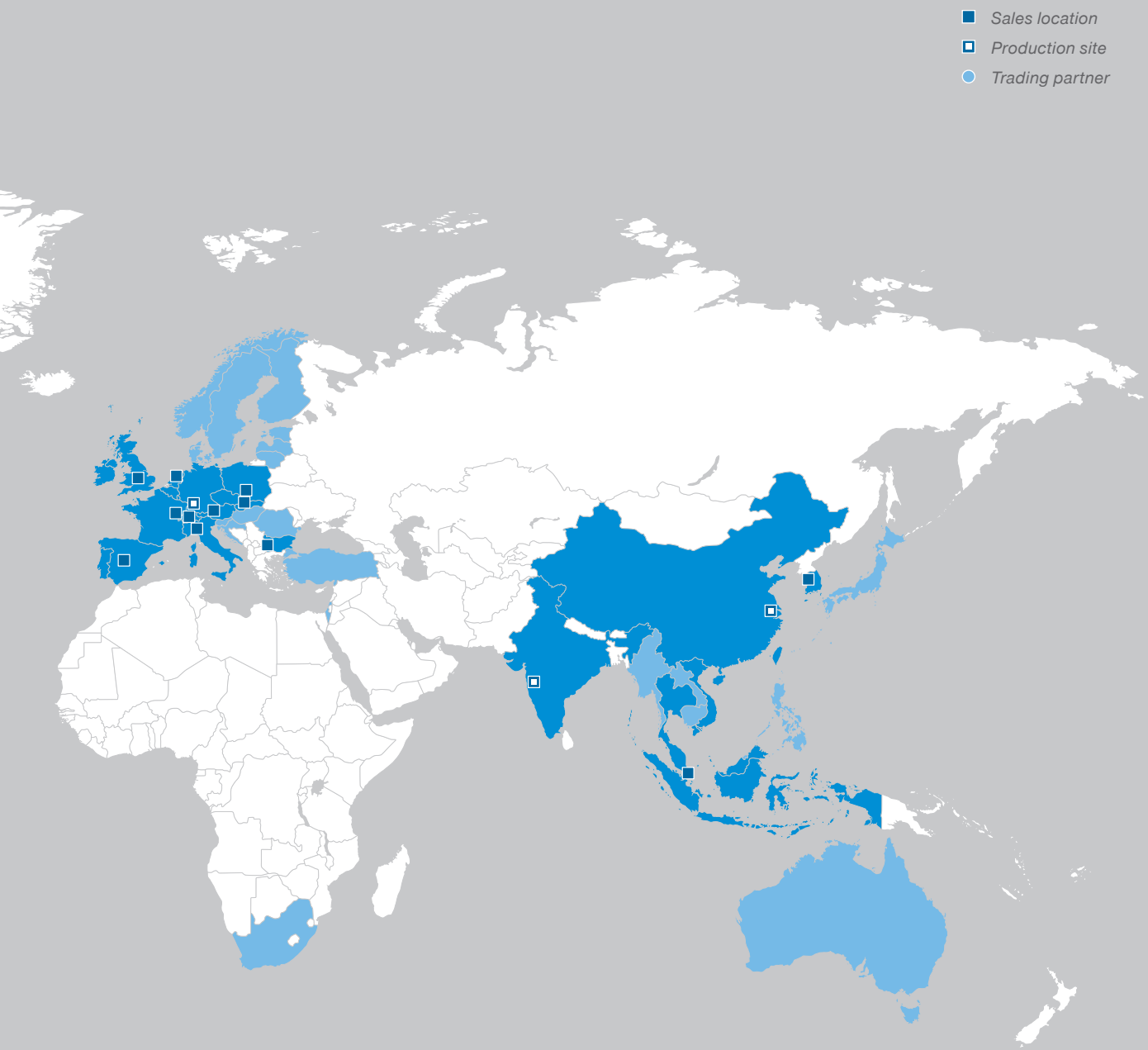
Sales location
Production site
Trading partner

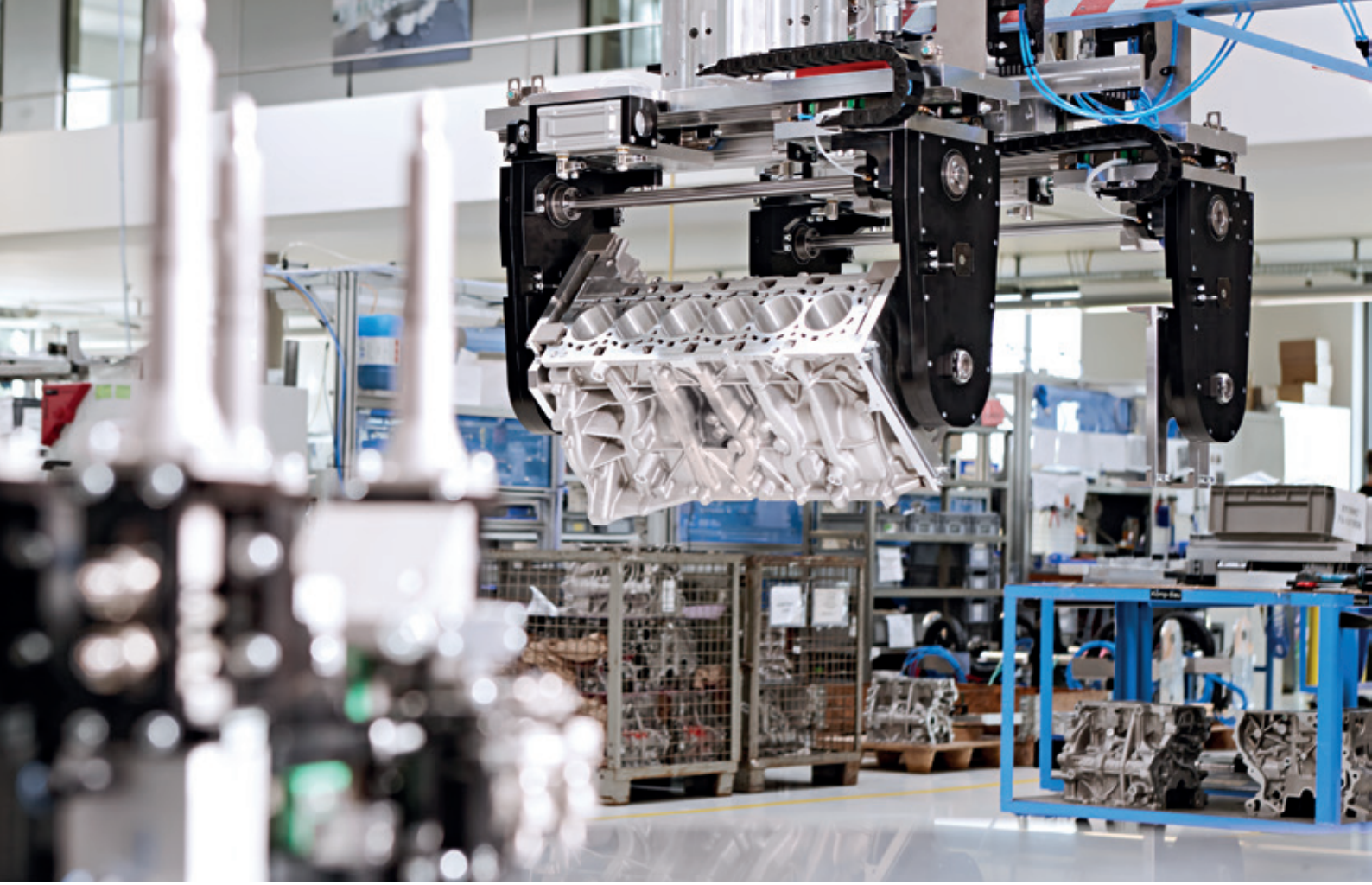

AUTOMATION OF THE FUTURE
HOLISTIC, HIGH-TECH

SERIES PRODUCTION COMPLEX COMPONENTS

With state-of-the-art manufacturing technologiesand precise production processes, we guarantee the reliable series production of complex components for a wide range of industries.

COMPONENTS FOR AUTOMATION

We develop and manufacture high-performance components that stand for maximum efficiency and reliability and can be seamlessly integrated into existing systems.

AUTOMATION SOLUTIONS AS A SYSTEM

As the market leader in high-tech automation, we create individual, process-optimizing system solutions. We combine the best from the world of mechanics with the latest technologies from the IoT.

We oversee the entire development process from the initial idea to the finished solution. We use state-of-the-art technologies to ensure maximum efficiency and quality.

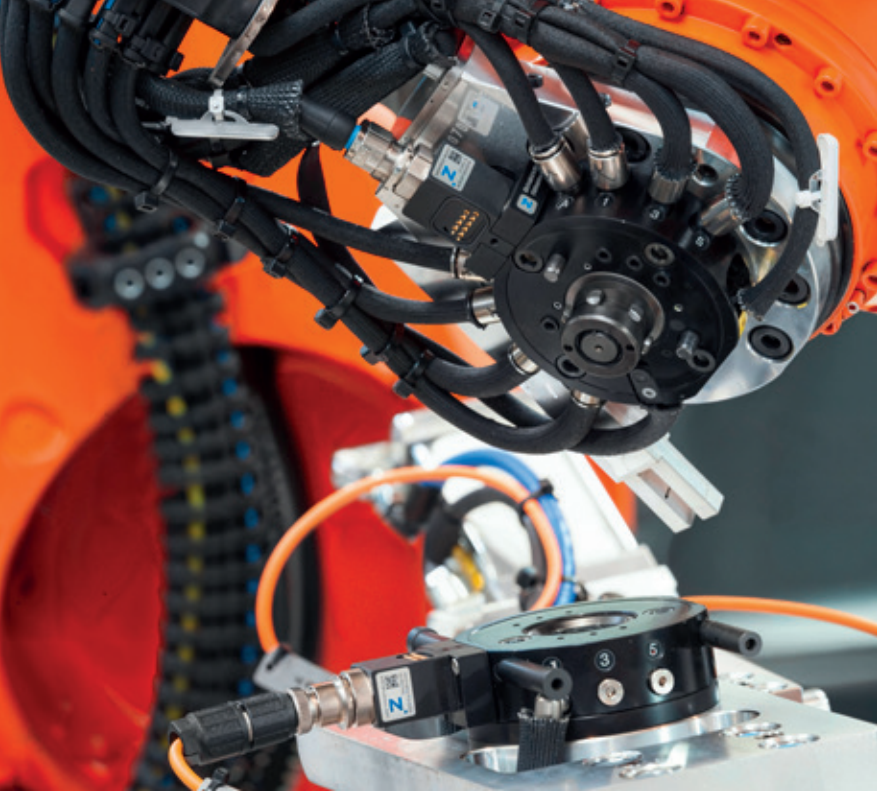

TECHNOLOGY ADVANTAGES
IN ALL MARKETS AND INDUSTRIES

THE BEST SOLUTION FOR EVERY INDUSTRY

For over 40 years, our company has been a leader in automation technology and offers integrated solutions in the fields of handling and vacuum technology, robotic solutions, clamping and braking technology, damping technology, machine technology and industrial communication.

Our expertise ranges from system components, mobile robotics, transport systems and robot cells to machines and systems. With our expertise in process technologies such as plastic injection molding, metal powder injection molding and 3D printing, we develop tailor-made solutions that meet the specific requirements of every industry. Our many years of experience and in-depth industry knowledge make us the ideal partner for mastering your challenges with innovative and efficient solutions. Discover how our expertise can help your company move forward.

OUR EXPERTISE – YOUR ADVANTAGE

- Mobility
- Mechanical and plant engineering
- Consumer goods
- Logistics
- Life science
- Furniture industry
- Electronics
- Robotic solutions

INFORMATION

Whether with foam or vacuum suction cups, the vacuum gripping systems adapt perfectly to any product and even allow complete layers to be gripped.

NEW PRODUCT PORTFOLIO
VACUUM TECHNOLOGY

GRIPPING SOLUTIONS THAT HOLD SECURELY!

With our variety of vacuum components, we have the right solution for all of your applications. From individual components to comprehensive all-in-one systems. Our product portfolio includes everything from simple vacuum suction cups and complex gripper systems to modular quick-change systems such as Smart Cup and Magic Cup. Modular quick-change systems enable uncomplicated customization, while all-in-one solutions offer seamless integration into existing production processes.

This means that vacuum applications can be optimally tailored to your individual requirements, guaranteeing maximum flexibility and efficiency. You can also use the product configurator to find the perfect solution for your requirements.

COMPREHENSIVE PRODUCT RANGE
OUR EXPERTISE – YOUR ADVANTAGE

Maximum efficiency
Using our advanced technologies, you can accelerate your processes and increase your productivity.

Extraordinary precision
Our products guarantee precise handling and processing, which are essential for demanding tasks.

Reliability
High-quality materials and innovative engineering ensure a long service life and low maintenance work.

ZIMMER group | VMECA

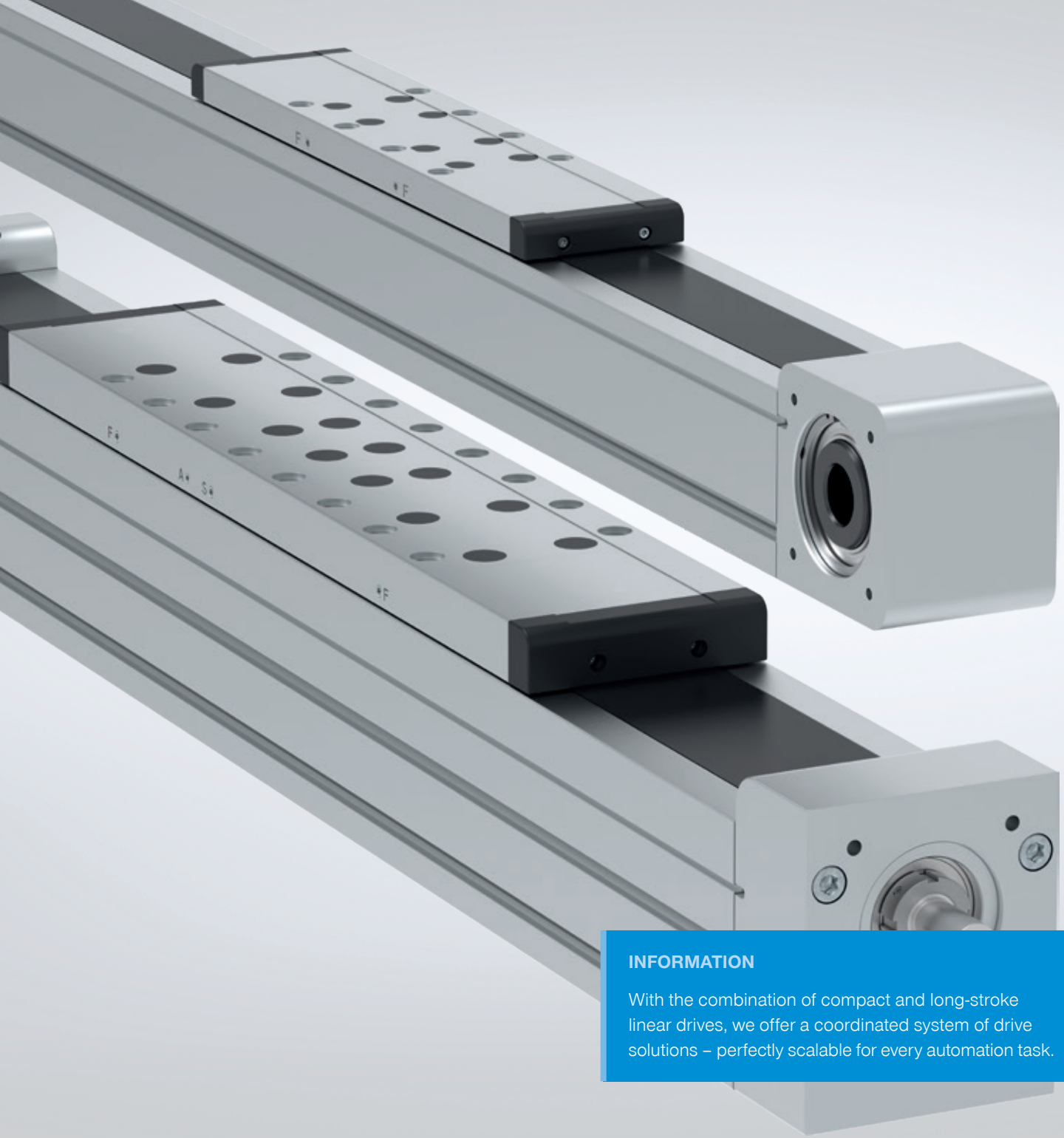

INFORMATION

With the combination of compact and long-stroke linear drives, we offer a coordinated system of drive solutions – perfectly scalable for every automation task.

NEW LONG-STROKE AXES
AMB AND AMS SERIES

EXPANDED PORTFOLIO

Compact axes and long-stroke axes are key elements of modern automation technology – precise, efficient and versatile. We are expanding our existing portfolio of compact axes from the AC series with our long-stroke axes from the AMB and AMS series in order to optimally meet requirements for longer travel paths. The toothed-belt axes of the AMB series stand for high dynamics, speed and range – ideal for short cycle times. The spindle axes of the AMS series are characterized by excellent precision and high feed forces and are therefore predestined for applications where the focus is on both load capacity and accuracy.

Long-stroke axes with a toothed belt drive

Installation size	Max. stroke [mm]	Max. speed [m/s]	Max. acceleration [m/s²]	Max. holding force [N]
AMB040	1,810	4	50	-
AMB060	5,670	5	50	400
AMB080	5,610	5	50	650
AMB120	5,550	5	50	1,200

Long-stroke axes with a spindle drive

Installation size	Max. stroke [mm]	Max. speed [m/s]	Max. acceleration [m/s²]	Max. holding force [N]
AMS040	900	0.5	30	-
AMS060	1,970	1.5	30	250
AMS080	2,100	2	30	500
AMS120	2,300	3.2	30	1,000

INFORMATION

Wherever fast cycle times, precise repeat accuracy and a high degree of process reliability and flexibility are required, the REP2000 shows its full potential.

NEW GRIPPER WITH ROTARY MODULE
REP2000 SERIES

TWO IN ONE

The new 2-jaw parallel rotary gripper from the REP2000 series combines gripping and turning in one compact module, setting new standards in terms of efficiency and space savings. The system enables optimum use of the available installation space and offers maximum functionality in a robust design. With protection class IP40 or IP54, the parallel rotary gripper is also ideally suited for harsh industrial environments.

Control via IO-Link allows you to flexibly adapt the stroke of the gripper jaws to the workpiece and adjust the approach angle of the endlessly rotating unit to the application.

OUR EXPERTISE – YOUR ADVANTAGE

- 5 million maintenance-free cycles
- Positionability via IO-Link
- Mechanical self-locking mechanism
- Adjustable swivel angle
- IP40 or IP54

INFORMATION

The aseptic tool changer meets the strictest hygiene regulations and sets new standards in the pharmaceutical and clean room industries.

NEW ASEPTIC TOOL CHANGER
WMR2000 SERIES

ASEPTIC STANDARD PRODUCT FOR SPECIAL REQUIREMENTS

The aseptic tool changer from the WMR2000 series features a hygienic, FDA-compliant design and meets the requirements of protection class IP68. The housing is made of easy-to-clean PET and is hydrogen peroxide resistant, making it ideal for use in hygienically sensitive areas. Up to four pneumatic pass throughs are supported. The innovative use of materials means that it is extremely light and compact. The magnetic tool changer enables the fast and easy exchange of tools.

A permanent electromagnet ensures that the tool and workpiece remain connected reliably, even when the electricity fails – a key safety feature. Match it with the aseptic pharmaceutical gripper based on the GEP2000 and GEH6000 series. The customized grippers with a hygienic design meet the highest hygiene and cleaning requirements and are ideal for use in sensitive applications and clean rooms.

FDA-compliant design

Resistance against aggressive cleaning agents

Corrosion protected

Hygienic design

Reduced particle emissions in accordance with GMP

IP68

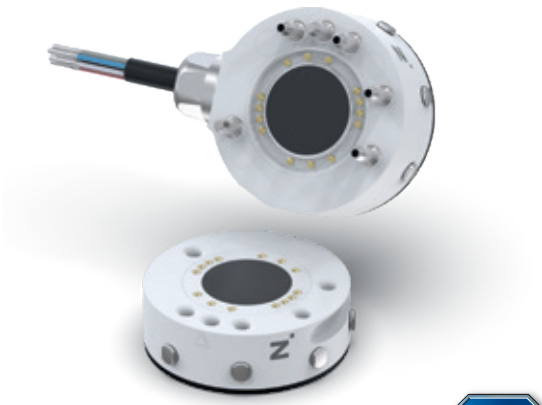

INFORMATION

The WPR5000 has an impressive flat design, increased repeat accuracy and maximum tightening stroke. The high load capacity ensures that even heavy tools weighing over 500 kg can be handled.

NEW TOOL CHANGER
WPR5000 SERIES

WPR5000 SERIES
OUR EXPERTISE – YOUR ADVANTAGE

Safer tool changer
The tool changer ensures maximum safety and meets the requirements of Performance Level d, Control Category 3. This is achieved by a spring-loaded piston, self-locking mechanism, optional sensors and other accessories.

Locking kinematics
A new benchmark for tool changers is set with innovative locking kinematics with locking bolts and extreme rigidity. The extremely flat design guarantees minimal moment load on the robot and allows smaller and more cost-effective robots to be used.

Endless variety
The energy elements of the WER1500 and WER3000 series allow the standardized transmission of pneumatics, hydraulics, electrical signals, power and communication and much more.

MORE INFORMATION

Tool changers
Scan here for our WPR5000 series tool changers, technical details and matching accessories.

INFORMATION

The new energy elements of the WER1500 and WER3000 series allow the standardized transmission of pneumatics, hydraulics, electrical signals, power and communication and much more.

NEW ENERGY ELEMENTS
WER1500, WER3000 AND WER4000 SERIES

ENDLESS VARIETY

Energy elements are the most important accessories for tool changers and are essential for the transmission of a wide range of different media from the stationary part to the loose part. All tool changers offer integrated air transfer systems as standard. If larger or smaller cross-sections are needed, energy elements can be used. In addition, almost all media such as load current, signal current, hydraulics and communication can be transmitted using energy elements.

OUR EXPERTISE – YOUR ADVANTAGE

- **Standardized:** Standardized interfaces and a modular design ensure flexible and cost-effective integration into all applications.
- **Integration:** Components can be integrated seamlessly into existing systems and processes.
- **Innovative:** The most modern technologies for efficient and future-proof solutions.

INFORMATION

The XYR9000 series is available in two versions — with and without clamping. This allows the systems to be adapted even better to individual operating conditions.

NEW HEAVY-DUTY AXIS COMPENSATION MODULES
XYR9000, ZR9000, CR9000 SERIES

PRECISION MEETS ROBUSTNESS

With the new heavy-duty axis compensation modules from the XYR9000, ZR9000 and CR9000 series the Zimmer Group sets new benchmarks in industrial automation. Conventional systems quickly reach their limits, especially when handling heavy workpieces. This is precisely where the new heavy-duty axle compensation modules come into play. They offer exceptional robustness for loads from 500 kg up to 2,000 kg, without compromising on precision and flexibility. The series enable axis compensation in the X, Y and Z directions as well as rotational compensation movements. A special highlight is the ability to combine axis compensation modules of the same size for maximum adaptability to a wide range of requirements.

XYR9000 series

Installation size	Stroke X/Y level +/- [mm]	Centered holding force [N]	Weight [kg]	IP class
XYR9050	15.0	10000	37–40	IP 40
XYR9075	15.0	10000	61–63	IP 40
XYR9100	20.0	20000	89–93	IP 40
XYR9150	20.0	20000	110–120	IP 40
XYR9200	20.0	20000	140–150	IP 40

INFORMATION

Whether in electronics production, the packaging industry, automotive assembly, logistics or laboratory automation – the MATCH angle flange opens up almost unlimitedapplication possibilities.

NEW ANGLE FLANGE
FOR THE MATCH END-OF-ARM ECOSYSTEM

FROM PICK & PLACE TO MACHINE LOADING

The angle flange of the LWR series was developed specifically for the MATCH end-of-arm ecosystem and enables quick and tool-free changes within seconds. It can be used universally, fits all common robot models and combines the two main handling technologies: Gripping and vacuum systems. Integration is particularly simple and direct – especially for IO-Link-capable grippers from the GEP2000, GEP5000, GEH6000IL and GPD5000IL series. Thanks to its compact design, the angle flange ensures a small interference contour and thus maximum freedom of movement. The compressed air supply and IO-Link control are integrated directly in the flange, which minimizes the installation effort. The flange is optionally available with a blow-out nozzle and a programming tip to extend the functionality even further.

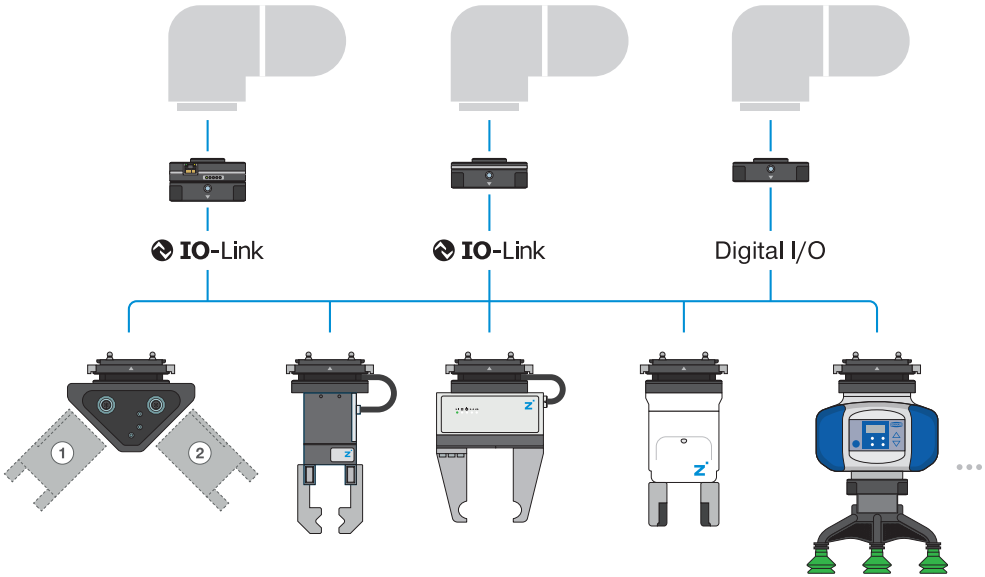

INFORMATION

ZiMo, consisting of a mobile table, a collaborative robot and end effectors, is the mobile and flexibly configurable robot cell that can be set up quickly and used in a variety of ways thanks to its modular design.

ZIMO AUTOMATION CELL
FOR BEGINNERS AND EXPERTS

THE ROBOT CELL FOR ANY REQUIREMENT

ZiMo is the mobile and cost-effective process automation solution for companies of all sizes. The modular system and versatile accessories make it easy to put together a customized, flexibly adaptable package – perfect for beginners and experienced programmers alike.

MORE INFO ABOUT ZIMO

Always up to date
Check out our website for detailed information on the robot cell. Visit us online and get all the information you need at just one click!

Easy Automation – easy integration

With Easy Automation, you get an all-round carefree package. The Zimmer HMI gives you easy control of the system, including the option of complete integration and commissioning. At the same time, you benefit from the wide range of options and accessories.

Platform Kit – configurable as you like

Would you like to program ZiMo completely by yourself? With the Platform Kit, you get the basic module with or without PLC and all ZiMo options and can configure the robot cell entirely according to your requirements.

INFORMATION

Whether as a lifting unit, with a robot module or customized – thanks to its modular design, you can customize Miles to your individual requirements.

AUTONOMOUS MOBILE ROBOT
MILES SERIES

INDIVIDUAL, DRIVERLESS TRANSPORT SYSTEMS FOR PRODUCTION AND LOGISTICS PROCESSES

Autonomous mobile robots (AMRs) are revolutionizing the industry and increasing efficiency in numerous sectors. AMRs are intelligent, self-navigating vehicles that are designed to perform tasks without direct human intervention. They combine state-of-the-art technologies to navigate complex environments, interact with objects and perform tasks with precision. Miles, the autonomous mobile robot from the Zimmer Group, optimizes your intralogistics and makes the transport of goods and materials more efficient than ever. Level up your logistics!

OUR EXPERTISE – YOUR ADVANTAGE

Maximum availability

- Best view of the working area at all times
- Working in collaboration – people and machines in a single system

Modular concept with free layout design

- No need for protective housing
- Interface for setting up different modules possible
- Later integration into existing processes possible

Simple extension of the automation system

- Additional AMRs can be integrated into the system later

Complete system comprising hardware, software and servicing

- Complete integration into the entire production process with control architecture from a single source
- Comprehensive system overview with powerful master computer
- Intelligent navigation and fleet management: Reprogramming of the AMR travel paths possible at any time

MOSAIC
MODULAR AUTOMATION PLATFORM

COMPREHENSIVE MODULARITY

MOSAIC (Modular System of Automation, Information and Communication) is a scalable, modular platform for the intelligent control and networking of technical systems in production and logistics. It combines modern automation and communication technologies with powerful data processing and is the basis for flexible, end-to-end processes.

Numerous functional units enable seamless integration into existing structures. Interfaces to MES and ERP systems allow direct ordering and order tracking. Fleet management coordinates autonomous mobile robots (AMRs) and modular transport control systems efficiently regulate the material flow.

For warehouse logistics, strategies for storage, retrieval and space allocation are available. Stacking logistics make it easy to stack and unstack all sorts of materials with lots of flexibility. Modules for simulation and optimizationgive you help develop logistics, calculate cycle times and improve processes.

Vision and sensor systems recognize objects, conditions and quality features. With the periphery connections, you can integrate external components such as doors, gates, machines or building technology. This makes MOSAIC a holistic solution for state-of-the-art networked automation and logistics environments.

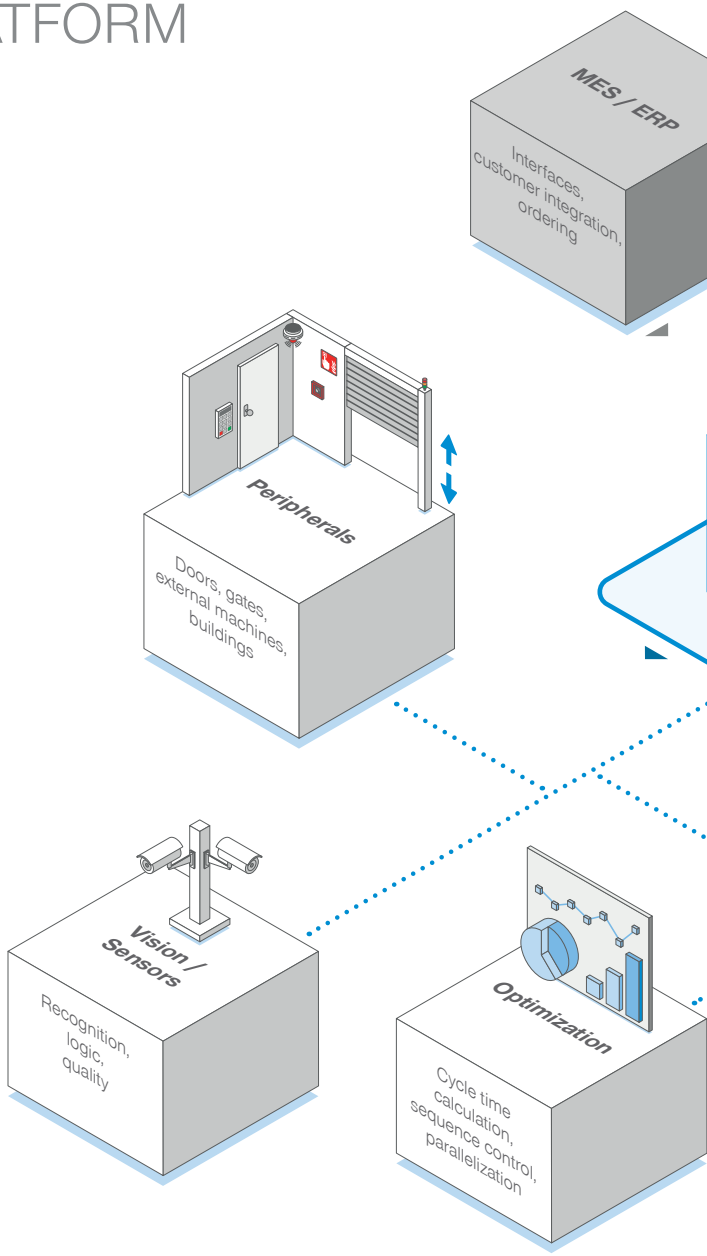

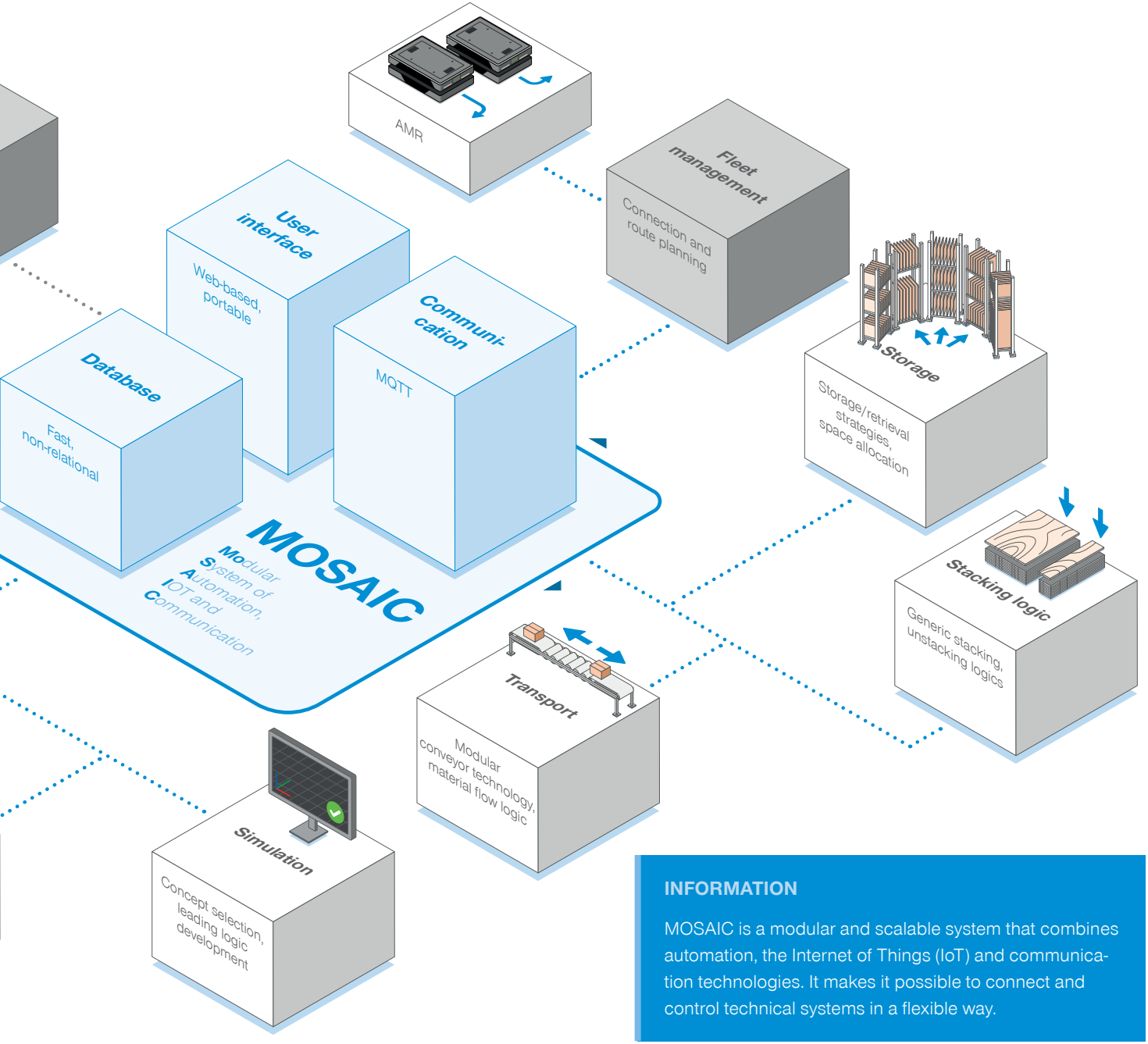

INFORMATION

MOSAIC is a modular and scalable system that combines automation, the Internet of Things (IoT) and communication technologies. It makes it possible to connect and control technical systems in a flexible way.

INFORMATION

With the "ED" version of the SPN series, you get the benefit of a highly functional zero-point clamping system that is uncompromisingly designed for efficiency, compatibility and safety.

NEW ZERO-POINT CLAMPING SYSTEM
SPN SERIES WITH ELECTRICAL SENSING

SPN SERIES

The new "ED" version of the SPN series zero-point clamping system enables electrical status monitoring for the open and clamped clamping states as well as component presence sensing. It is an important function for automated production processes in which process reliability and real-time monitoring are of crucial. Other standard functions are opening, the PLUS connection and blowing out.

All clamping systems from the Zimmer Group have form-fit locking by means of clamping segments adapted to the bolt contour, which ensures an extremely rigid connection that can withstand the highest forces and guarantees maximum repeat accuracy.

SPN series

	▶ Technical data		
Order No.	**SPN062ED**	**SPN112ED**	**SPN138ED**
Operating pressure [bar]	4–7	4–7	4–7
Clamping force [kN]	1–2	4–6	12–18
Clamping force with PLUS connection [kN]	2.5–5	10–15	24–36
Piston position sensing / positioning check	Electric	Electric	Electric

INFORMATION

As key components in machining centers, tooling machines and end-of-arm applications, our motor spindles guarantee optimal value creation.thanks to maximum precision, productivity, availability and durability.

NEW MOTOR SPINDLES
ADAPTED TO CUSTOMER REQUIREMENTS

CUSTOMIZED SOLUTIONS

The Zimmer Group is a manufacturer of high-quality motor spindles that, together with matching accessories and peripherals give you everything you need for maximum precision and performance in your production. Our portfolio includes not only a wide selection of standard motor spindles, but also the development of individual, customized solutions that are perfectly tailored to your specific requirements. Our great strength lies in our ability to develop innovative and flexible solutions that not only meet the highest technological standards, but also significantly increase the efficiency and productivity of your applications.

Features
- Smart process control or diagnostics through IO-Link
- Sensors for temperature, speed & vibrations
- Rotary feed-through for MQL & IKZ
- Controllable connections

Quick-change interface
Standardized, fixed or automatically changeable interface for connecting each motor spindle to the robot flange.

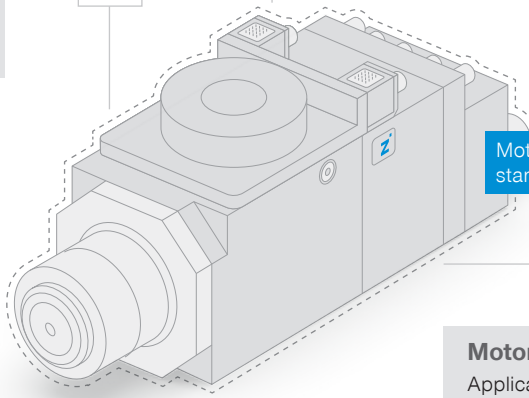

Motor spindle from a standard series as the basis

CUSTOMIZED MOTOR SPINDLES

Motor
Application-specific motor design for every application with various motor technologies – whether synchronous or asynchronous, air-cooled or liquid-cooled.

Tool interface
Whether an automatic or manual tool change, with HSK, ER interface or shaft end – everything is possible.

INFORMATION

Electric, air-cooled motor spindle for deburring – can be used flexibly for a wide range of tasks thanks to variable speed control.

NEW MOTOR SPINDLES
ELECTRIC DEBURRING SPINDLE

ELECTRIC MOTOR SPINDLE FOR DEBURRING

Using robots to deburr parts is becoming more important and is turning into a key technology for a lot of industries. To meet the growing demand, the Zimmer Group develops customized electrical solutions that are specially tailored to the requirements of modern deburring. With our innovative systems, a wide range of components and materials can be processed efficiently and precisely – and with a huge selection of tools.

WITHOUT DEFLECTION

Fixed motor spindle without deflection function of the spindle shaft.

+ Air-cooled
+ Manual tool change
+ Automatic tool change

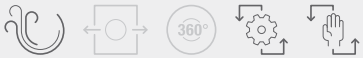

RADAIL DEFLECTION

Radial deflection function of the spindle shaft with lockable degrees of freedom. Optionally with damping module for even better machining results.

+ Air-cooled
+ Manual tool change
+ Automatic tool change

AXIAL DEFLECTION

Motor spindle with axial deflection function of the spindle shaft.

+ Air-cooled
+ Automatic tool change

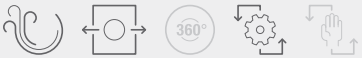

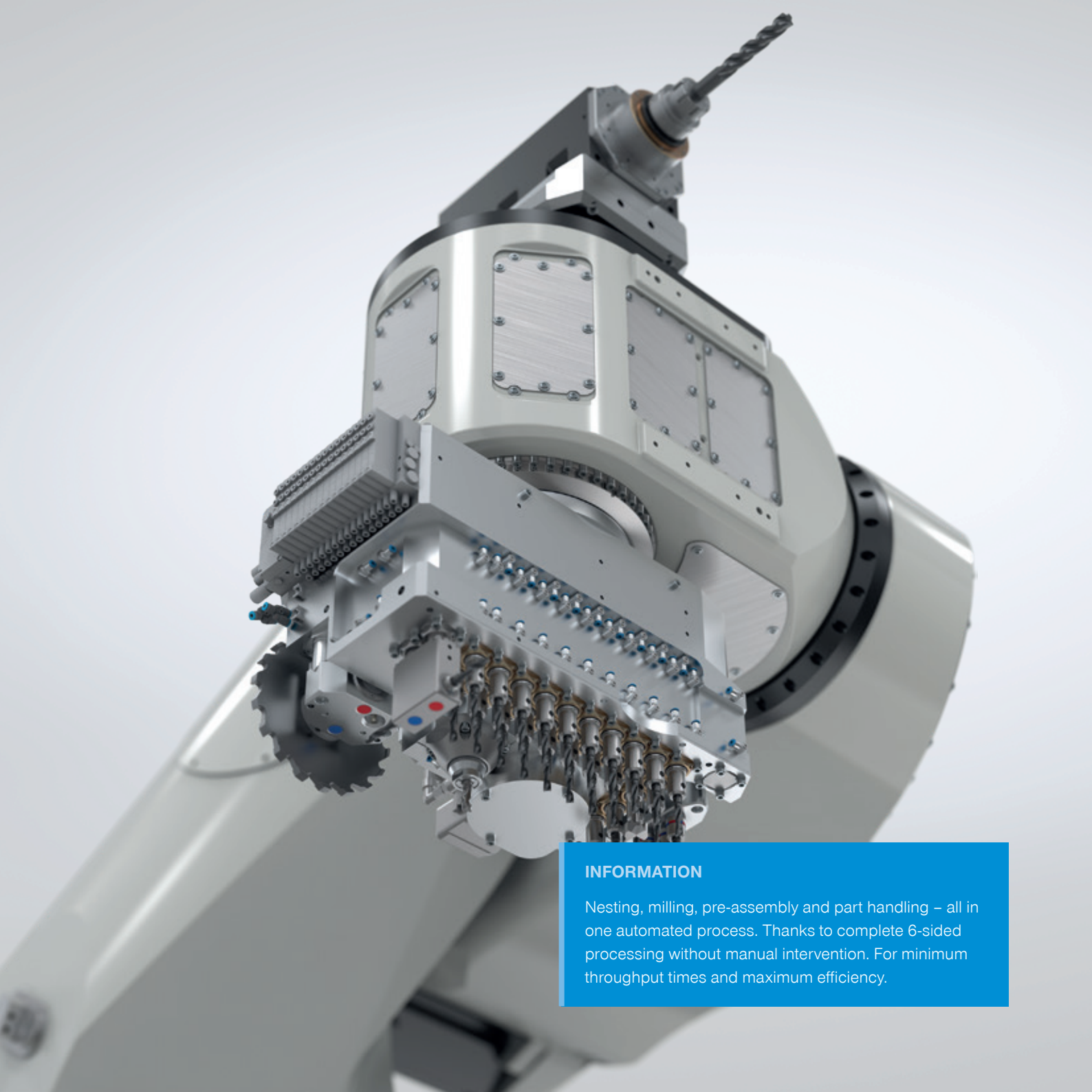

INFORMATION

Nesting, milling, pre-assembly and part handling – all in one automated process. Thanks to complete 6-sided processing without manual intervention. For minimum throughput times and maximum efficiency.

NEW MACHINING ROBOT
RAPTOR

RAPTOR MACHINING ROBOT

Raptor, the heart of the machining cell, was specially developed for the woodworking industry and carries out precise cutting, shaping, sanding and lacquering tasks. Its use helps to increase efficiency and reduce costs, as it completes complex tasks quickly, precisely and in a more space-saving manner than portal machines. Raptor has a multi-functional head with 2 flanges, a change interface for quick tool changes and will impress you with its internal energy supply system.

1. **Change interface, swivel-mounted milling spindle, swivel-mounted multi-spindle head**
2. **Storage station**
3. **Unit station**
4. **Pin table**
5. **Machining cell**

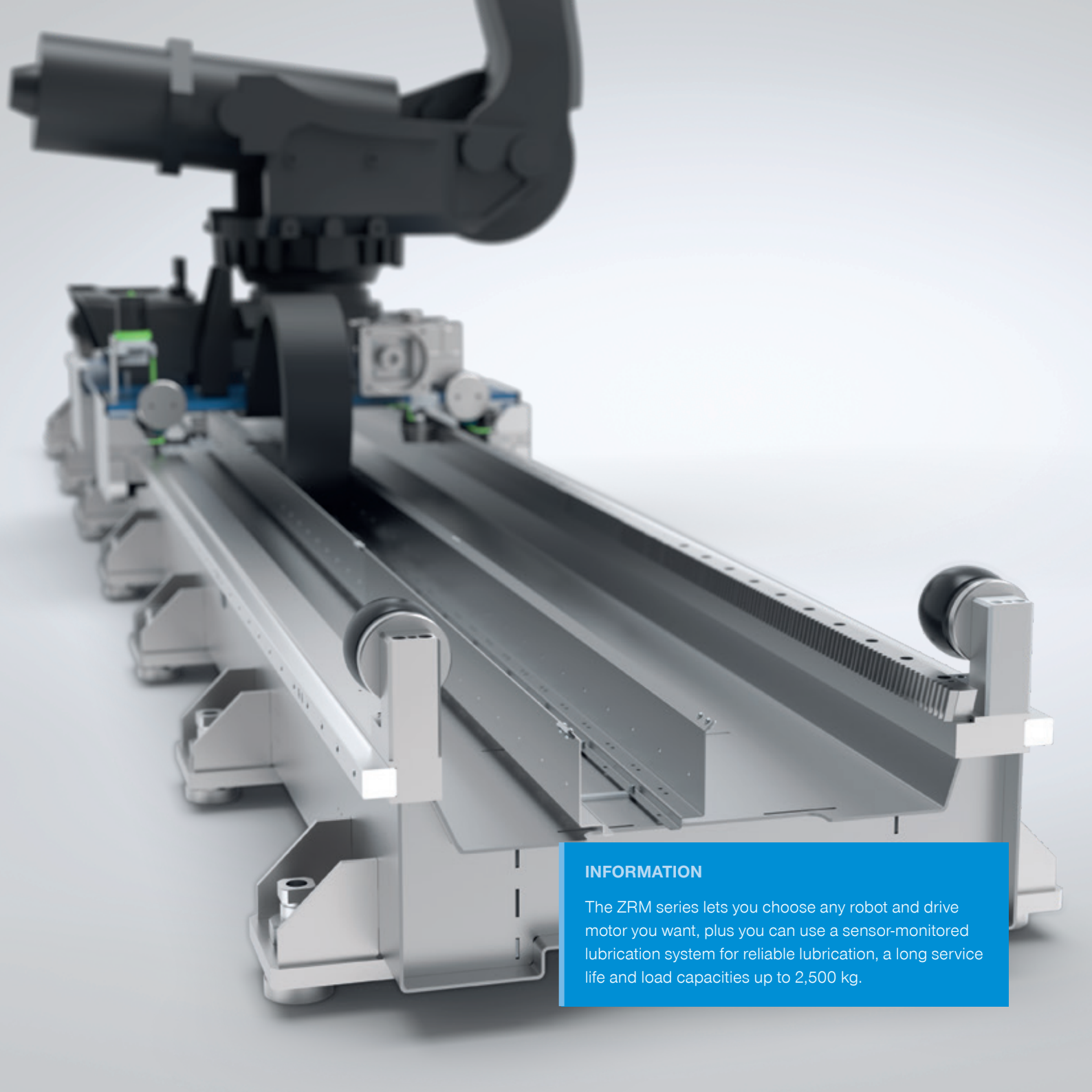

INFORMATION

The ZRM series lets you choose any robot and drive motor you want, plus you can use a sensor-monitored lubrication system for reliable lubrication, a long service life and load capacities up to 2,500 kg.

MOBILE ROBOTICS
ZRM SERIES

ZRM SEIRES – ROBOT TRAVERSING AXIS

The robot traversing axis from the ZRM series is required when robots have to travel in parallel on production lines or load multiple machines. The ZRM series is designed for 4 sizes of robots and offers load capacities of up to 2,500 kg per carriage. Thanks to modular segments, different run lengths can be implemented flexibly. Optional extras include weld-proof covers, secure clamping of the carriage position and an additional carriage for using two robots on a 7th axis to complete to offer.

OUR EXPERTISE – YOUR ADVANTAGE

- Robust
- Flexible
- Durable
- Customized

ZRM series

	▶ Technical data			
Order No.	**ZRM 250**	**ZRM 1000**	**ZRM 1500**	**ZRM 2500**
Max. load capacity [kg]	250	1000	1500	2500
Total length min. / max: [mm]	2,000... 100,000	2,000... 100,000	3,500... 100,000	3,500... 100,000
Positioning repeat accuracy [mm]	+/- 0.05	+/- 0.05	+/- 0.05	+/- 0.05
Max. acceleration [m/s²]	4	4	4	3
Max. speed [m/s]	1.6	1.6	1.5	1.5

MOBILE ROBOTICS AND TRANSPORT SYSTEMS
SYSTEMS

TAILOR-MADE CONVEYOR LINES

We develop customized, scalable transport systems and conveyor lines across industries that can be seamlessly integrated into your production system. Our complete solutions include conveyor systems such as roller conveyors, belt conveyors, strap conveyors and angled transfer units, all with outstanding adaptability and flexibility. Thanks to our modular solutions, we enable faster layout creation, reduce the effort involved in mechanical and electrical planning and speed up production, assembly and commissioning. This is how we ensure that your material flow stays not only efficient but also flexible and sustainable – for any type of conveyed goods.

OUR EXPERTISE – YOUR ADVANTAGE

- **Everything from a single source:** fromplanning to after-sales service
- **Flexibility:** customized design
- **Standardized and modular:** simple integration
- **High-quality materials and reputable purchased parts:** durable and reliable
- **Extensive accessories:** optimal adaptation

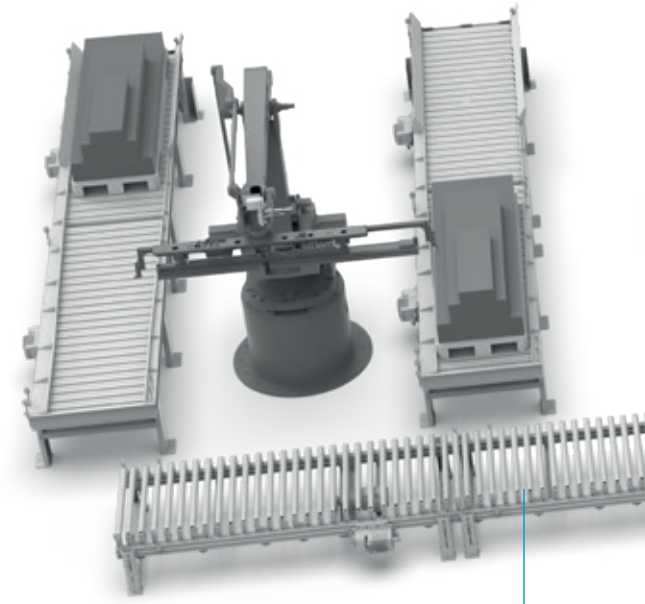

Roller conveyors
A robust and energy-efficient conveyor that uses driven or non-driven rollers to make sure that the material moves smoothly.

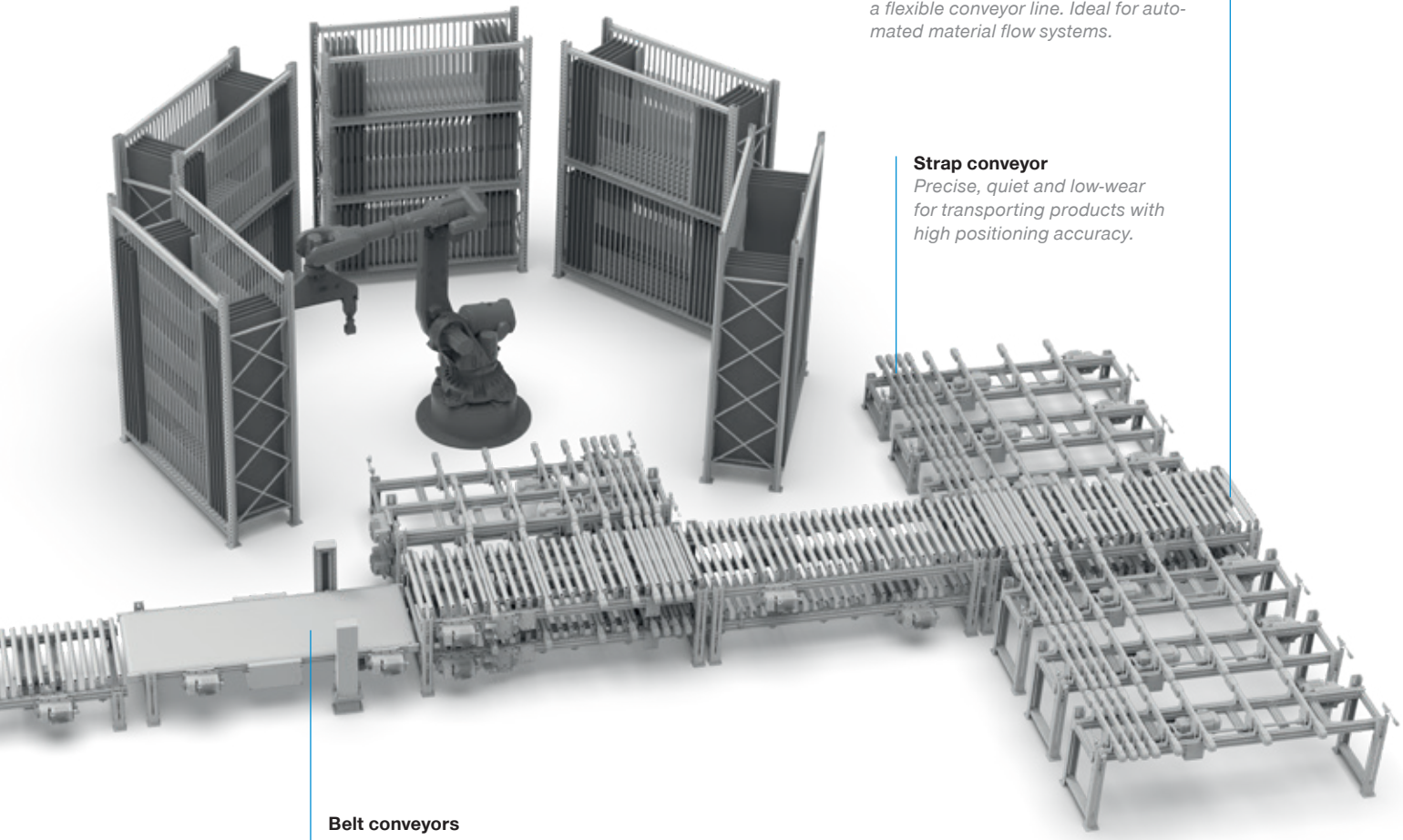

Angled transfer unit
Enables quick changes of direction and a flexible conveyor line. Ideal for automated material flow systems.

Strap conveyor
Precise, quiet and low-wear for transporting products with high positioning accuracy.

Belt conveyors
For the safe and continuous transportation of single goods and sensitive or irregular products.

MACHINES AND PLANTS
SYSTEMS

ROBOT-BASED SORTING AND DECOUPLING CELLS

In addition to drilling, Zimmer Systems creates applications for sorting furniture parts. These cells are integrated into an overall process; alternatively, they can also be used as a stand-alone application. Modern sorting concepts enable high-performance and an adaptable control of the material flow. The systems are designed for throughput rates of 2.0 to 25.0 parts per minute and ensure efficient sorting. Storage and retrieval take place on separate conveyor levels, which ensures a smooth flow of material. Robot-based cells can manipulate several parts at the same time, which increases process speed and reduces downtimes. The storage volume of the system can be flexibly adapted to the specific requirements, ensuring that individual needs are met in the best possible way.

Traveling axle sorting version

Component sorting in the cell with traveling axis is particularly suitable for solutions with medium dynamics and a high volume. The minimum output with one cell is 4-5 cycles per minute, while higher power requirements can be achieved by using multiple cells side by side.

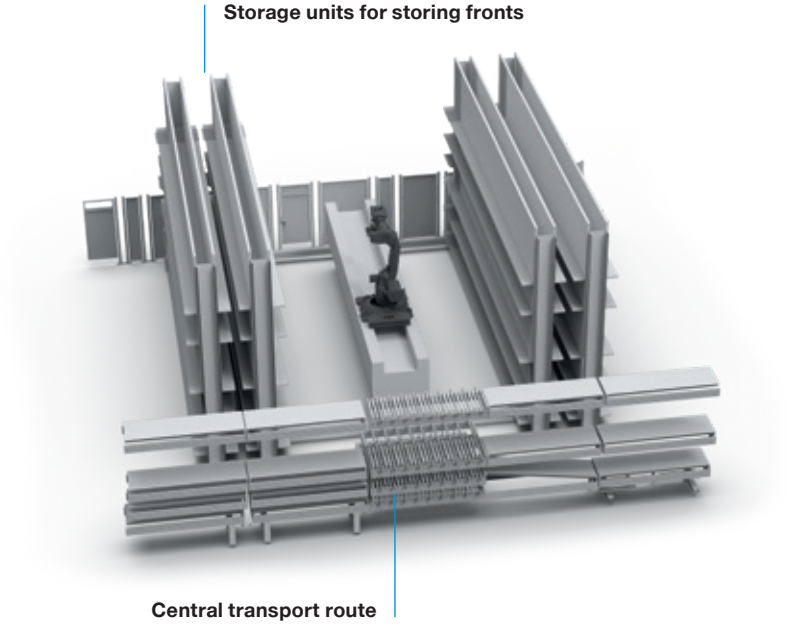

Loading / unloading

The loading and unloading units ensure the automatic feeding of parts. The sorting cells can be loaded and unloaded in various configurations (from the stack, from carriages, connected to conveyor technology, etc.). The following picture shows loading from the stack.

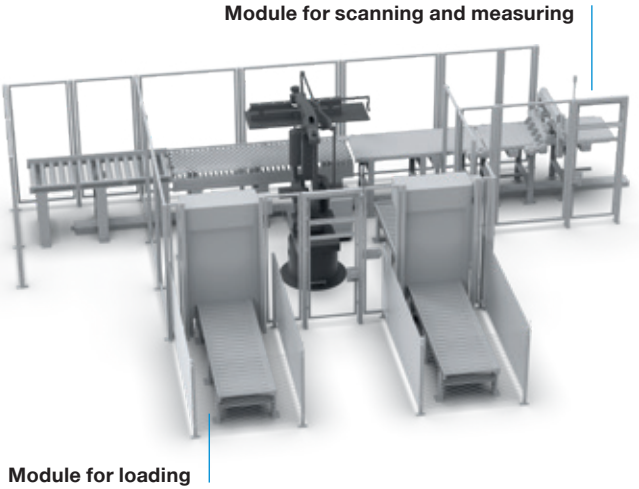

Round cell sorting version

The round cell enables efficient, automated component sorting. The sorting cells are seamlessly integrated into the material flow. The round cell is ideal for solutions with high dynamics and a limited volume. The minimum output of a cell is 5-5.5 cycles per minute, while higher output requirements are covered by using multiple cells side by side.

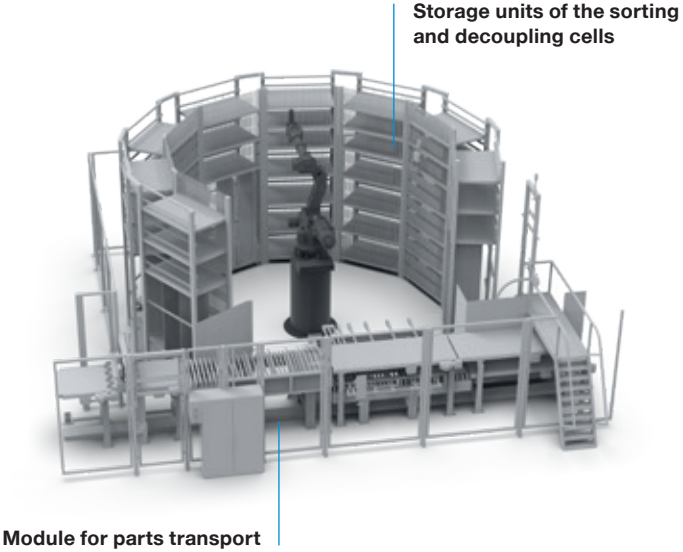

NOTES

The contents and data are correct as of printing. Edition 06/2025.
This brochure was created with great care and all information has been checked for accuracy. However, we assume no liability for incorrect or incomplete information. Zimmer Group reserves the right to technical changes and improvements through constant ongoing development of products and services. All text, images, depictions and illustrations in this brochure are the property of Zimmer Group and protected by copyright. Any duplicating, editing, changing, translating, filming, processing or saving in electronic systems is prohibited without the consent of Zimmer Group.

Order no. MKT000016-02-E

ZIMMER GROUP – THE KNOW-HOW FACTORY

OUR KNOW-HOW FACTORY WORKS WITH ALL INDUSTRIES AND DELIVERS EVERYTHING FROM A SINGLE SOURCE. OUR PRODUCT RANGE IS FAR REACHING, BOTH IN ITS DEPTH AND ITS BREADTH.

DO YOU HAVE A DEVELOPMENT PROBLEM? WE'LL SOLVE IT! SET US A CHALLENGE IN RESEARCH AND DEVELOPMENT. COUNTLESS INNOVATIONS ORIGINATE FROM OUR COMPANY. WE ARE ENTHUSIASTIC ABOUT NEW PRODUCTS AND PRIDE OURSELVES ON OUR CORPORATE PIONEERING SPIRIT.

CONTACT – WORLDWIDE

With our current 17 global subsidiaries and partners in over 125 countries, we offer the excellent service of a technology leader. We look forward to hearing from you!

www.zimmer-group.com/en-us/contact

HERE FOR YOU 24/7/365 – OUR VIRTUAL TRADE SHOW BOOTH

With impressive features such as an animated camera flight, clickable information hotspots and 3D models that can be rotated, we guarantee that you will be thrilled—virtually.

www.zimmer-group.com/en-us/expo

HEADQUARTERS:
ZIMMER GROUP
Am Glockenloch 2
DE 77866 Rheinau
T +49 7844 9139-0
F +49 7844 9139-1199
info.de@zimmer-group.com
www.zimmer-group.com