INSTALLATION AND OPERATING INSTRUCTIONS

Linear axis with spindle drive
AMS

DDOC01821

THE KNOW-HOW FACTORY

Content

1 Introduction 4
1.1 Supporting documents 4
1.2 Notices and graphics in the instructions 4

2 Safety notices 5

3 Proper use 6

4 Personnel qualification 6
4.1 Electricians 6
4.2 Specialists 6
4.3 Instructed personnel 6
4.4 Service personnel 6
4.5 Additional qualifications 6

5 Product description 7
5.1 Type plate 7
5.2 Product variants 8
5.2.1 Clamping element 8
5.2.2 Slides 8
5.2.3 Cover strip 8

6 Functional description 9
6.1 Position measuring system 9

7 Technical data 9

8 Accessories/scope of delivery 9

9 Transportation/storage/preservation 10
9.1 Transporting the product 10

10 Installation 11
10.1 Installing the product 12
10.1.1 Installing the product with T-slot nuts 13
10.1.2 Installing the product with clamping claws 13
10.2 Installing the sensors 14
10.2.1 Installing magnetic field sensors 14
10.2.2 Installing inductive sensors 15
10.3 Installing the drive 16
10.3.1 Installing the motor 16
10.4 Installing the customer-specific application 18
10.5 Installing the energy supply 18
10.5.1 Installing the pneumatic system 18
10.5.2 Installing the electronics 19

11 Commissioning 21
11.1 Checking operational readiness 21
11.2 Preparing for commissioning 22
11.2.1 Device configuration 23
11.2.2 Configuring the drive control system 24
11.3 Making settings in the project 25
11.4 Adding technology objects 26
11.5 Referencing by Homing 29
11.6 Using the function block 30
11.7 Function in the function block 30
11.7.1 Monitoring and switching on 30
11.7.2 References 32
11.7.3 Manual control 32

DDOC01821 / e EN / 2026-08-05

11.7.4 Easy Move motion 32
11.7.5 Absolute movement....33
11.7.6 Setting and monitoring....33

12 Error diagnosis 34

13 Maintenance....36
13.1 Relubricating the product 37
13.2 Replacing the cover strip 38

14 Decommissioning/disposal 38

15 RoHS declaration....39

16 Declaration of Incorporation (Machinery Directive) 40

17 Declaration of Incorporation 41

1 Introduction

1.1 Supporting documents

NOTICE

Read through the instructions before installing or working with the product.

The instructions contain important notes for your personal safety. They must be read and understood by all persons who work with or handle the product during any phase of the product lifetime.

The documents listed below are available for download on our website www.zimmer-group.com.

- Instructions
- Catalogs, drawings, CAD data, performance data
- Information on accessories
- Technical data sheets
- General Terms and Conditions, including warranty information.

⇨ Only those documents currently available on the website are valid.

In these instructions, "product" refers to the product designation on the title page!

1.2 Notices and graphics in the instructions

DANGER

This notice warns of an imminent danger to the life and health of people. Ignoring these notices can lead to serious injury or even death.

► You absolutely must comply with the described measures for avoiding these dangers!

⇨ The warning symbols are assigned according to the type of danger.

WARNING

This notice warns of a situation that is potentially hazardous to personal health. Ignoring these notices can cause serious injury or damage to health.

► You absolutely must comply with the described measures for avoiding these dangers!

⇨ The warning symbols are assigned according to the type of danger.

CAUTION

This notice warns of a situation that is potentially hazardous to persons. Ignoring these notices can cause minor, reversible injuries.

► You absolutely must comply with the described measures for avoiding these dangers!

⇨ The warning symbols are assigned according to the type of danger.

NOTICE

This notice warns of possible material and environmental damage. Ignoring these notices can result in damage to the product or the environment.

► You absolutely must comply with the described measures for avoiding these dangers!

⇨ The warning symbols are assigned according to the type of danger.

INFORMATION

This category contains useful tips for handling the product efficiently. Failure to observe these tips will not result in damage to the product. This information does not include any information relevant to health or workplace safety.

2 Safety notices

WARNING

Risk of injury from crushing

There is a risk of crushing injuries between the carriage and the end block.

► Ensure that no persons are within the movement range of the product.

CAUTION

Risk of injury and material damage in case of non-compliance

The product is state-of-the-art.

The following are examples of situations in which the product may cause a hazard:

- The product is not properly installed, used or maintained.
- The product is not used for its designated purpose.
- The locally applicable regulations, laws, directives or guidelines are not observed.

► The product may only be used in accordance with these instructions and the product's technical data. Any changes or additions to the intended use of the product, as well as modifications to the product, such as those in the following examples, require the written permission of the manufacturer:

- Use of the product under extreme conditions, such as aggressive fluids or abrasive dusts
- Additional drilled holes or threads

⇨ Zimmer Group GmbH shall accept no liability for any damage caused by improper use. The operator bears sole responsibility.

► Make sure that the power supply is disconnected before you mount, adjust, modify, maintain or repair the product.

► Whenever work is carried out on the product, make sure that the product cannot be actuated by mistake.

► Perform maintenance tasks, renovation work or attachment work outside of the machine's danger zone when possible.

► Do not reach into the operational range of the product.

► Always keep an adequate safety distance.

► Observe the specified maintenance intervals and specifications regarding the quality of the operating material.

► When using the product under extreme conditions, adjust the maintenance interval according to the degree of contamination.

► Check the completeness and tightening torques of all mounting screws.

3 Proper use

NOTICE

Material damage and malfunction in case of non-compliance

The product is only to be used in its original state with its original accessories, with no unauthorized changes and within the stipulated parameter limits and operating conditions.

Any other or secondary use is deemed improper.

- ▶ Operate the product only in compliance with the associated instructions.
- ▶ Operate the product only when it is in a technical condition that corresponds to the guaranteed parameters and operating conditions.
- ⇨ Zimmer Group GmbH shall accept no liability for any damage caused by improper use. The operator bears sole responsibility.

- The product is designated for use in closed facilities.
- The product is intended for industrial use.
- The product is not suited for use in a potentially explosive atmosphere.
- Direct contact with perishable goods/food is not permitted.
- The product is designed for moving and positioning loads within automated systems.

4 Personnel qualification

WARNING

Inadequate qualification can cause injury and material damage

If inadequately qualified personnel perform work on the product, this can cause serious injuries and significant material damage.

- ▶ All work on the product must be performed by qualified personnel.
- ▶ Before working with the product, read the document in its entirety and make sure that you have understood everything.
- ▶ Observe country-specific accident prevention regulations and the general safety notices.

The following qualifications are a prerequisite for performing various work on the product.

4.1 Electricians

Electricians are able to perform work on electrical systems, can recognize and avoid possible dangers and know the relevant standards and provisions due to their technical training, knowledge and experience.

4.2 Specialists

Specialists are able to perform the assigned work, can recognize and avoid possible dangers and know the relevant standards and provisions due to their technical training, knowledge and experience.

4.3 Instructed personnel

Instructed personnel have been trained by the operating company on the tasks and possible dangers of improper behavior.

4.4 Service personnel

Service personnel are able to perform the assigned work and can recognize and avoid possible dangers due to their technical training, knowledge and experience.

4.5 Additional qualifications

Persons who work with the product must be familiar with the valid safety regulations and laws as well as the standards, guidelines and laws listed in this document.

Personnel who work with the product must have facility-issued authorization to commission, program, configure, operate, maintain and also decommission this product.

5 Product description

The product is a linear axis with spindle drive.

The optional drive consists of a coupling, coupling housing, adapter plates and motor.

The following illustrations depict example product variants.

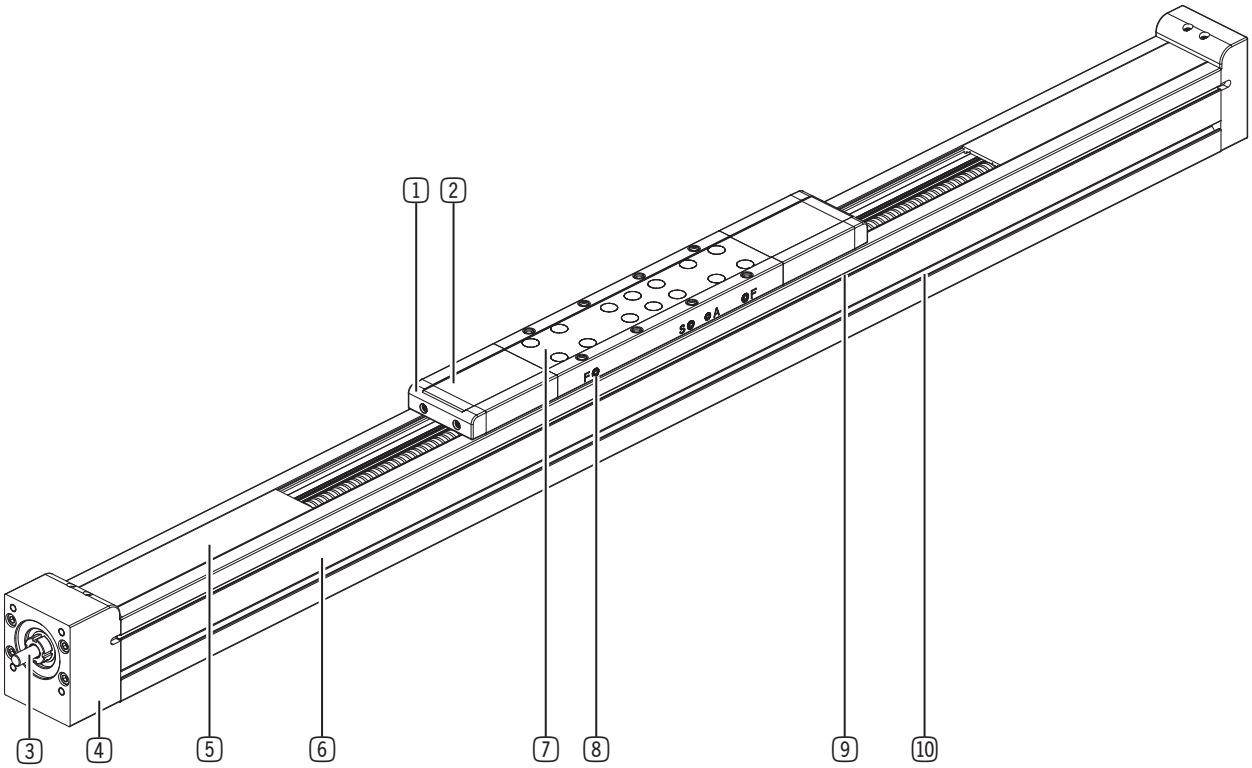

1 Carriage end piece

2 Cover strip guide

3 Spindle

4 End block

5 Cover strip

6 Axis profile

7 Slides

8 Lubrication points

9 Sensor slot

10 Assembly slot

5.1 Type plate

A type plate is attached to the product.

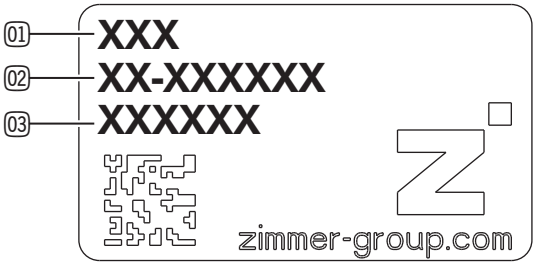

01 Article number

02 Type key

03 Confirmation number

5.2 Product variants

Order number	Meaning	Variant
AM	Axis type	-
S	Drive type	S: Spindle drive
060	Installation size [mm]	040 060 080 120
5999	Stroke	Configurable stroke length [mm]
20	Spindle pitch [mm]	AMS040: 5, 10 AMS060: 5, 10 ,16, 30 AMS080: 5, 10, 20, 40 AMS120: 10, 20, 32, 64
C	Clamping element	C: with clamping element (AMS060, AMS080, AMS120) D: without clamping element
L1	Carriage size	S1: 1x S L1: 1x L
C	Cover strip	C: with cover strip D: without cover strip

5.2.1 Clamping element

During configuration, a clamping element can be selected starting from installation size 60.

The clamping element has a spring energy accumulator that maintains the clamping process even in the depressurized state. When the clamping element is pressurized, the clamping process is interrupted and the guide rail is released.

5.2.2 Slides

A variety of carriage variants are available for this product.

INFORMATION

The carriage sizes depend on the axis profile. As a result, the slides have different dimensions depending on the installation size selected.

1 Carriage length

2 Cover strip guide

3 Carriage end piece

5.2.3 Cover strip

During configuration, a cover strip can be selected that protects the product from the ingress of dust and dirt.

INFORMATION

- The entire length of the carriage structure consists of the carriage length as well as the required cover strip guide for the product variants with a cover strip.
- The optional cover strip cannot be retrofitted.

6 Functional description

The product has a ball screw that is driven by an electric motor. The carriage is attached to the nut that moves along the spindle and performs a linear movement as a result. The desired stroke can be selected in millimeter increments during configuration. The servo drive regulates the position and speed so that each position can be adjusted safely and precisely.

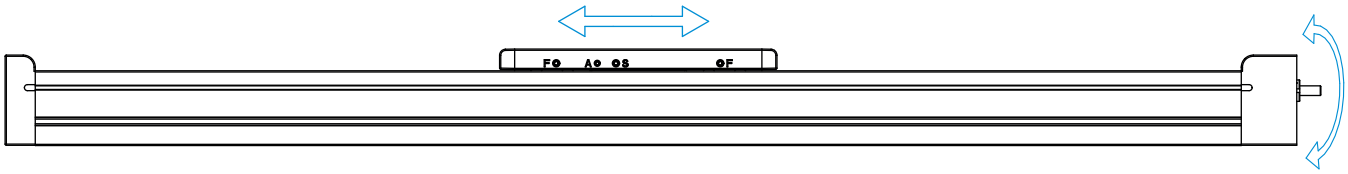

6.1 Position measuring system

The optional drive of the product has a motor with a multiturn absolute encoder.

Der Multiturn-Absolutwertgeber ist für Sicherheitsfunktionen geeignet.

Da die Stellung der Motorwelle beim Einbau nicht definiert ist, muss bei der Inbetriebnahme ein Nullpunkt festgelegt werden.

7 Technical data

INFORMATION

► You can find the information in the technical data sheet or Configurator on our website.

This data varies within the series, depending on the specific design.

8 Accessories/scope of delivery

INFORMATION

If any accessories not sold or authorized by Zimmer Group GmbH are used, the function of the product cannot be guaranteed. Zimmer Group GmbH accessories are specifically tailored to the individual products.

► For optional accessories and those included in the scope of delivery, refer to our website.

Manufacturer	Component	Website
Siemens	Motor	www.siemens.com
Siemens	Drive control system	www.siemens.com

9 Transportation/storage/preservation

CAUTION

Risk of injury when transporting heavy loads

Minor to severe injury may occur when transporting by hand.

- ► Wear suitable protective equipment.
- ► Secure the product from falling, dropping or slipping during transport.

- ► Transport and storage of the product must be done only with the original packaging.
- ► If the product has already been installed on the superordinate machine unit, care must be taken during transport to ensure that no unexpected movements can occur.
  - ► Before commissioning the product and after transport, check all power and communication connections as well as all mechanical connections.
- ► If the product is stored for an extended period, the following points are to be observed:
  - ► Keep the storage location as dust-free and dry as possible.
  - ► Avoid temperature fluctuations.
  - ► Avoid wind/drafts/water condensation formation.
  - ► Pack the product and do not expose it to direct sunlight during storage.
- ► Clean all components. There must be no soiling left on the components.
- ► Visually inspect all components.
- ► Remove all foreign substances.

9.1 Transporting the product

NOTICE

Risk of material damage when transporting without proper support

Long axis profiles can sag when transported improperly.

- ► Lift the product at the supporting points according to the figure.
- ► Use suitable lifting gear and attachment equipment with sufficient load capacity.
- ► When lifting the product, it must be secured, e.g. using belts, at suitable intervals.
- ► Do not subject the product to additional loads during transport.
- ► Do not lift the product at the attachment parts.
- ► Add additional support to heavy attachment parts.

- ► Position the belt from the outside to the inside at one quarter intervals of the entire length.

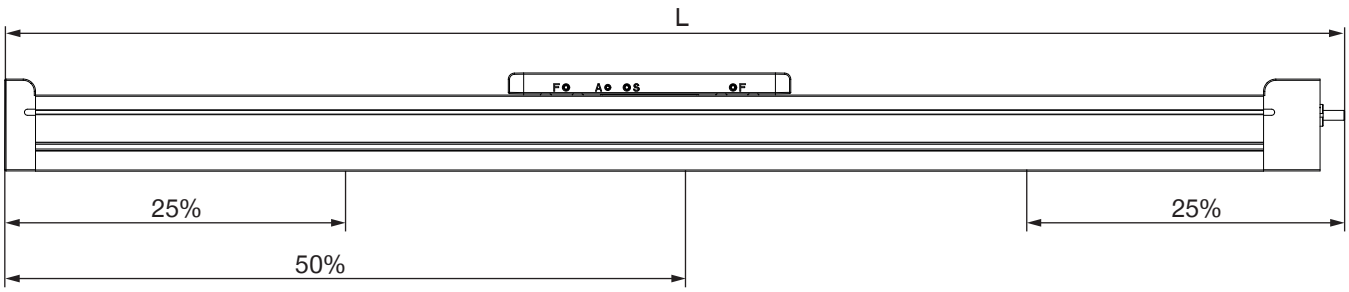

10 Installation

WARNING

Risk of injury due to uncontrolled movements

Risk of injury in case of unexpected movement of the machine or system into which the product is to be installed.

- ► Switch off the energy supply of the machine before any work.
- ► Secure the power supply against being switched on unintentionally.
- ► Check the machine for any residual energy that may be present.

WARNING

Suspended loads can cause injury

Falling loads can cause severe injuries.

- ► Always keep an adequate safety distance from suspended loads.

CAUTION

Risk of injury due to uncontrolled movements

Risk of injury in the event of uncontrolled movement of the product when the power supply is connected.

- ► Switch off the power supply to the machine before carrying out any work.
- ► Secure the power supply against being switched on unintentionally.
- ► Check the machine for any residual energy that may be present.

CAUTION

Risk of injury due to uncontrolled movements

The carriage can sag and cause crushing if not used horizontally or if product variants are used that do not have a clamping element.

- ► Secure the carriage against unintentional movements.

CAUTION

Risk of injury due to uncontrolled movements

Improper handling can cause the product to fall and cause crushing.

- ► Secure the product from falling, dropping or slipping during transport.
- ► Wear suitable protective equipment.

Assembly requirements	
Permissible flatness tolerance [mm/m]	0.2
Strength class of the mounting screws	8.8

INFORMATION

Further installation information:

- The mounting screws are not included in the scope of delivery.

- ► Install the product on an appropriate mounting surface in accordance with the flatness specifications.
- ► Make sure that the mounting piece is sufficiently rigid.
- ► Ensure the cleanliness of the connection surfaces.
- ► Please note the permitted tightening torques of the mounting screws at www.zimmer-group.com/en/td.

10.1 Installing the product

WARNING

Risk of injury and material damage in case of non-compliance

If unsuitable mounting elements are used or if the number of mounting elements is insufficient, the product may break off as a result of load or vibration.

- ► Use suitable mounting screws.
- ► Maintain the required minimum number of mounting elements depending on the load.
- ► Comply with the permitted tightening torques of the mounting screws.
- ► Use threadlocker.

CAUTION

Material damage in case of installation without suitable support

Long profiles can sag in case of improper installation.

- ► Install the product with supports at multiple points depending on the length or on a continuous, even mounting surface.

NOTICE

Non-compliance may result in material damage.

The product can be installed in any position.

The installation is performed via the axis profile using mounting elements.

- ► Please note that the orientation selected in the Configurator must correspond to the installation.

10.1.1 Installing the product with T-slot nuts

- ▶ Calculate the required number of mounting elements.
- ▶ Drill appropriately sized holes in the mounting piece.
- ▶ Clean the mounting surfaces.
- ▶ Swivel the mounting elements into the groove on the axis profile.
- ▶ Position the product on the mounting piece.
- ▶ Install the product to the mounting piece by screwing the mounting screws into the T-slot nuts.
- ▶ Comply with the permitted tightening torques of the mounting screws.

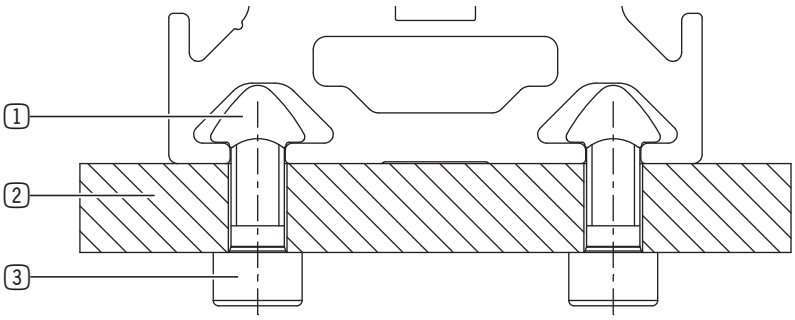

1 T-slot nut

2 Mounting piece

3 Mounting screw

10.1.2 Installing the product with clamping claws

- ▶ Calculate the required number of mounting elements.
- ▶ Drill appropriately sized holes in the mounting piece.
- ▶ Clean the mounting surfaces.
- ▶ Position the product on the mounting piece.
- ▶ Swivel the mounting elements into the groove on the axis profile.
- ▶ Mount the product by screwing the mounting screws into the mounting piece.
- ▶ Comply with the permitted tightening torques of the mounting screws.

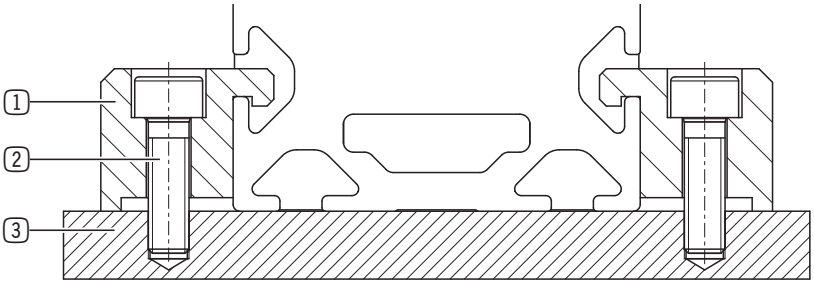

1 Clamping claws

2 Mounting screw

3 Mounting piece

10.2 Installing the sensors

NOTICE

Non-compliance may result in material damage.

Cables must be installed with sufficient length.

- ▶ Ensure that the cables cannot be pinched, crushed, or torn off within the movement and swivel ranges.

The sensors define the end positions of the carriage. They act as a safety component by limiting the travel path before there is a collision between the carriage and the end position.

Magnetic field sensors or inductive sensors can be used to limit the end positions.

INFORMATION

- ▶ For more information on setting the sensors (HW limit switches), refer to the chapter “Adding technology objects.”

10.2.1 Installing magnetic field sensors

- ▶ Slide the sensor bracket into the C-groove on the product.
- ▶ Position the sensor bracket.
- ▶ Install the sensor bracket on the product by tightening the corresponding grub screw.
- ▶ Slide the sensor into the sensor bracket.
- ▶ Clamp the sensor by tightening the second grub screw.

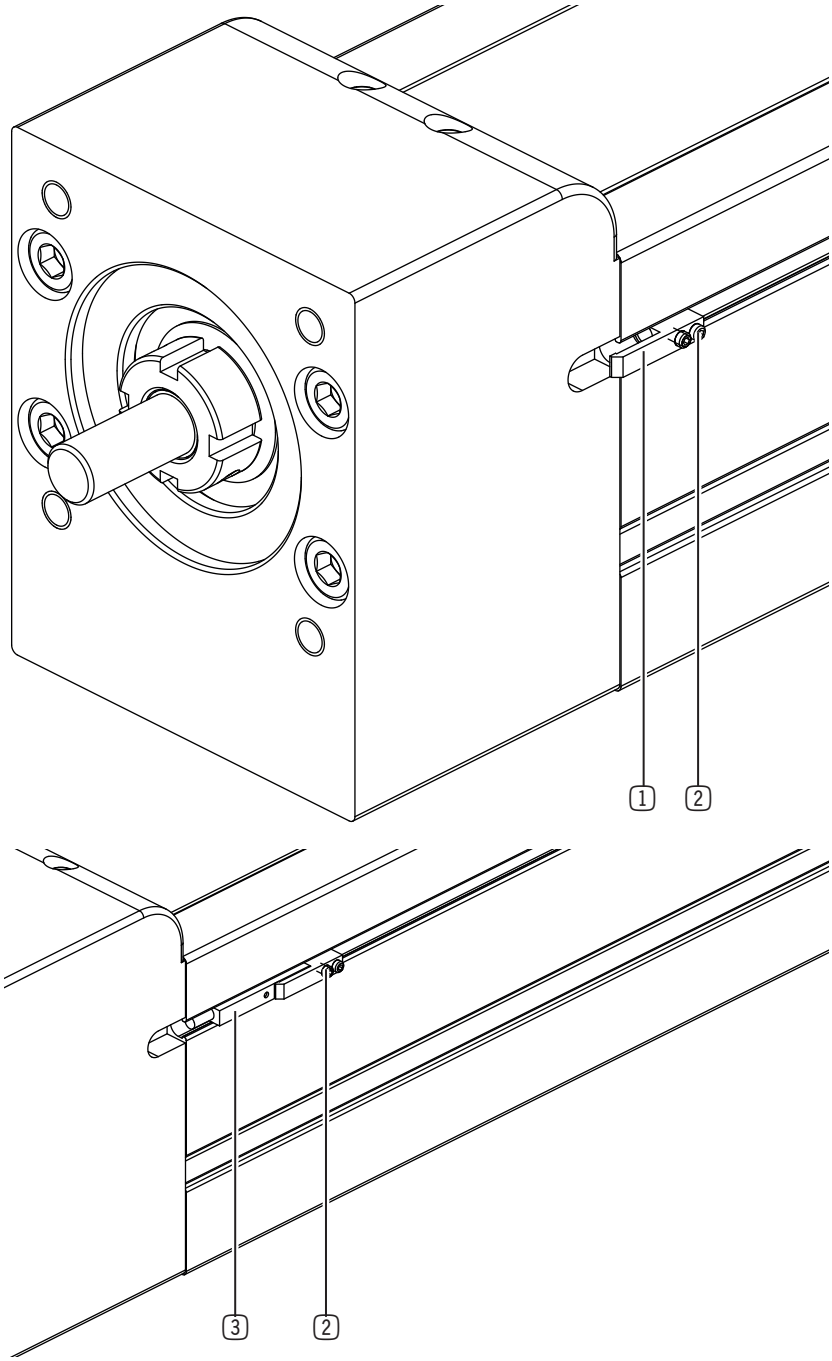

1 Sensor bracket

2 Set Screw

3 Sensor

10.2.2 Installing inductive sensors

- ▶ Mount the shift flag to the slide using the mounting screws.
- ▶ Position the T-slot nuts in the groove on the product.
- ▶ Install the sensor bracket on the T-slot nuts using the mounting screws.
- ▶ Install the sensor on the sensor bracket.

1 Shift flag

2 Mounting screw

3 T-slot nut

4 Mounting screw

5 Sensor

6 Sensor bracket

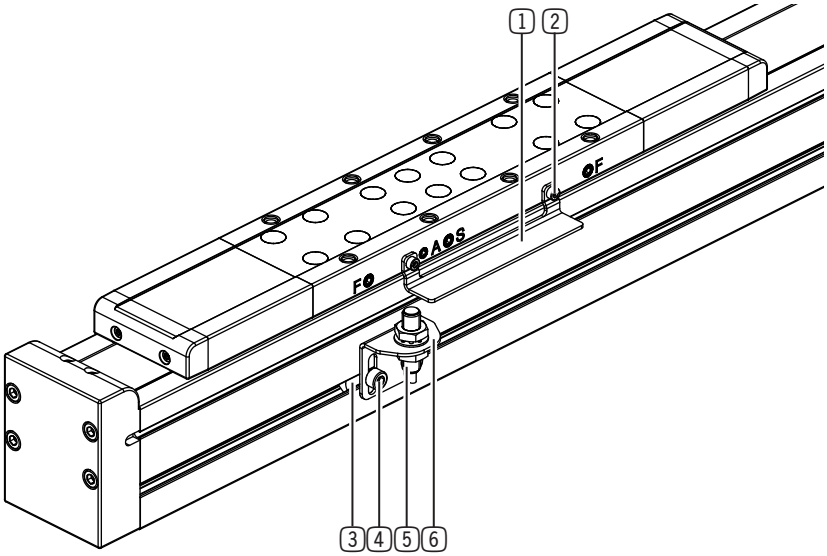

10.3 Installing the drive

INFORMATION

The number of required adapter plates can vary depending on the drive.
The following sections depict examples of product variants.

10.3.1 Installing the motor

- ▶ Put the clamping hub on the spindle.
- ▶ Tighten the clamping screw in the clamping hub.
  - ▶ Observe the tightening torque listed in the table.
- ▶ Put the elastomer ring gear on the clamping hub.
- ▶ Position the coupling housing on the end block so that the holes are aligned.
- ▶ Mount the coupling housing with the mounting screws.

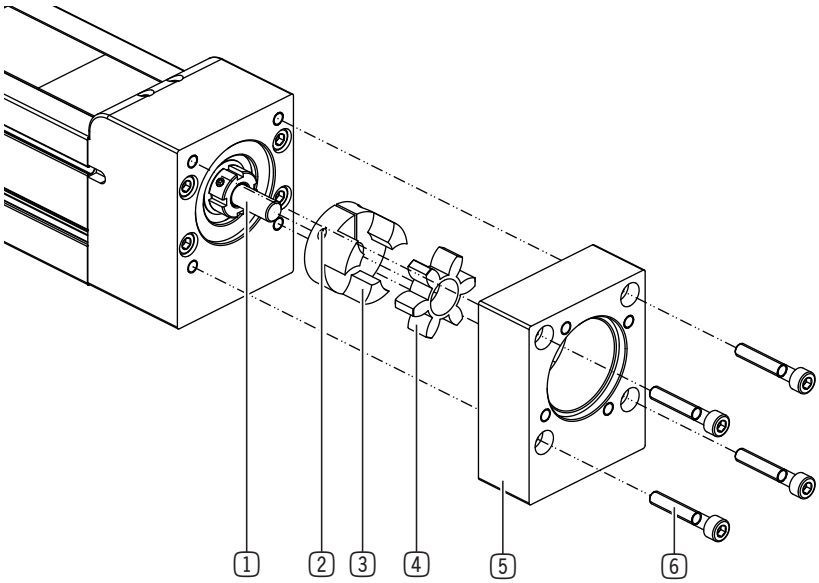

1. Spindle
2. Clamping screw
3. Clamping hub
4. Elastomer ring gear
5. Coupling housing (PAK)
6. Mounting screw

Installation size [mm]	Clamping screw tightening torque [Nm]
40	4
60	8
80	15
120	35

- ▶ Mount the motor adapter plate to the clutch housing using the mounting screws.
- ▶ Put the clamping hub on the motor shaft.

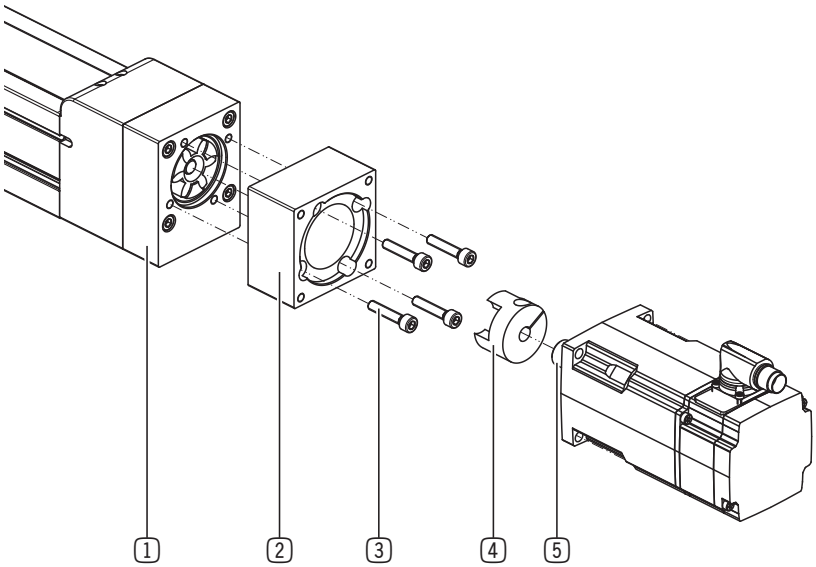

1. Coupling housing (PAK)
2. Motor adapter plate (PAM)
3. Mounting screw
4. Clamping hub
5. Motor shaft

▶ Set a motor shaft protrusion of 0.5 mm.

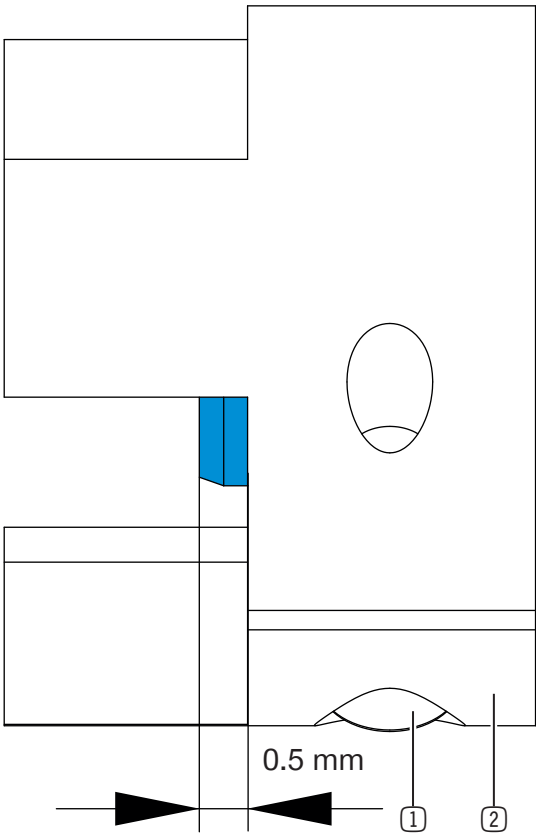

1 Clamping screw

2 Clamping hub

▶ Tighten the clamping screw in the clamping hub.

  ▶ Observe the tightening torque listed in the table.

▶ Position the motor on the motor adapter plate.

▶ Mount the motor to the motor adapter plate in accordance with the manufacturer's instructions.

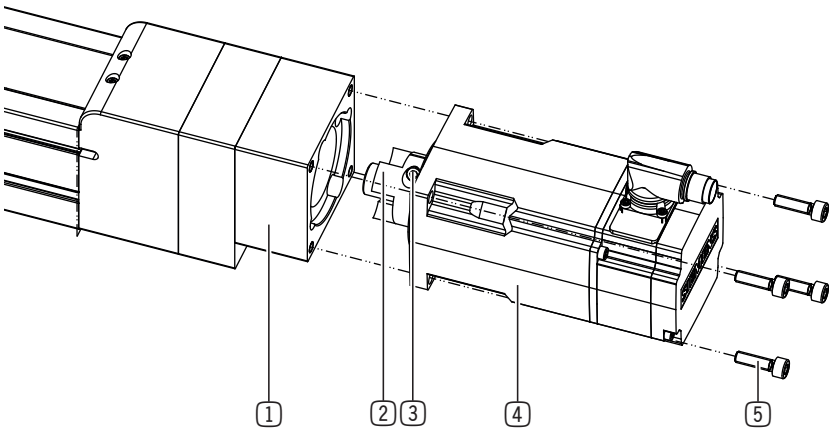

1 Motor adapter plate (PAM)

2 Clamping hub

3 Clamping screw

4 Motor

5 Mounting screw

Installation size [mm]	Clamping screw tightening torque [Nm]
40	4
60	8
80	15
120	35

10.4 Installing the customer-specific application

WARNING

Risk of injury and material damage in case of non-compliance

If unsuitable mounting elements are used or if the number of mounting elements is insufficient, the product may break off as a result of load or vibration.

- ▶ Use suitable mounting screws.
- ▶ Maintain the required minimum number of mounting elements depending on the load.
- ▶ Comply with the permitted tightening torques of the mounting screws.
- ▶ Use threadlocker.

NOTICE

Non-compliance may result in material damage.

- ▶ If a product variant is being used with more than one carriage, only use centering sleeves in one of the two slides to prevent distortion.

- ▶ Insert the centering sleeves crosswise into the designated fits on the carriage.
- ▶ Position the customer-specific application.
- ▶ Loosely attach the mounting screws.
- ▶ Tighten the mounting screws without distortion.

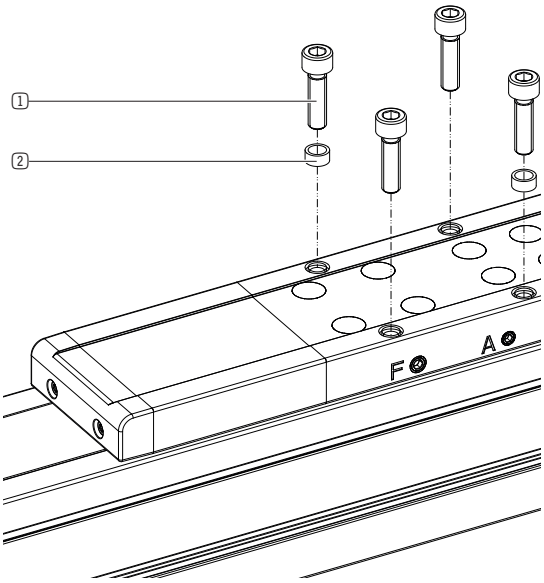

1 Mounting screw

2 Centering sleeve

10.5 Installing the energy supply

10.5.1 Installing the pneumatic system

INFORMATION

The pneumatics only need to be installed if using the optional clamping element.

- ▶ Remove the grub screws.
- ▶ Mount the screw fitting in the provided connection.
- ▶ Mount the pneumatic hose in the screw fitting.

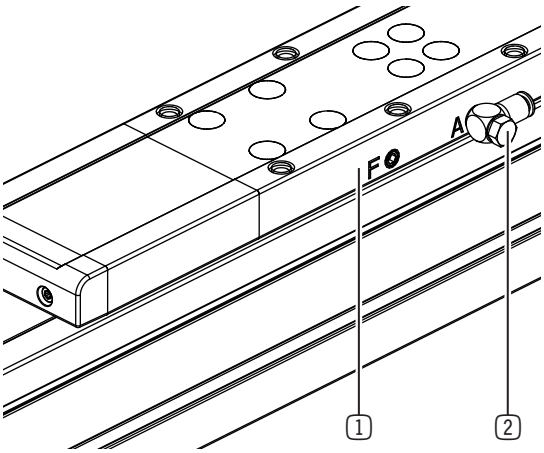

1 Slides

2 Screw fitting

10.5.2 Installing the electronics

► Connect the connecting line for the motor to the drive control system, including the power supply, motor holding brake and position encoder.

10.5.2.1 Supply with alternating current

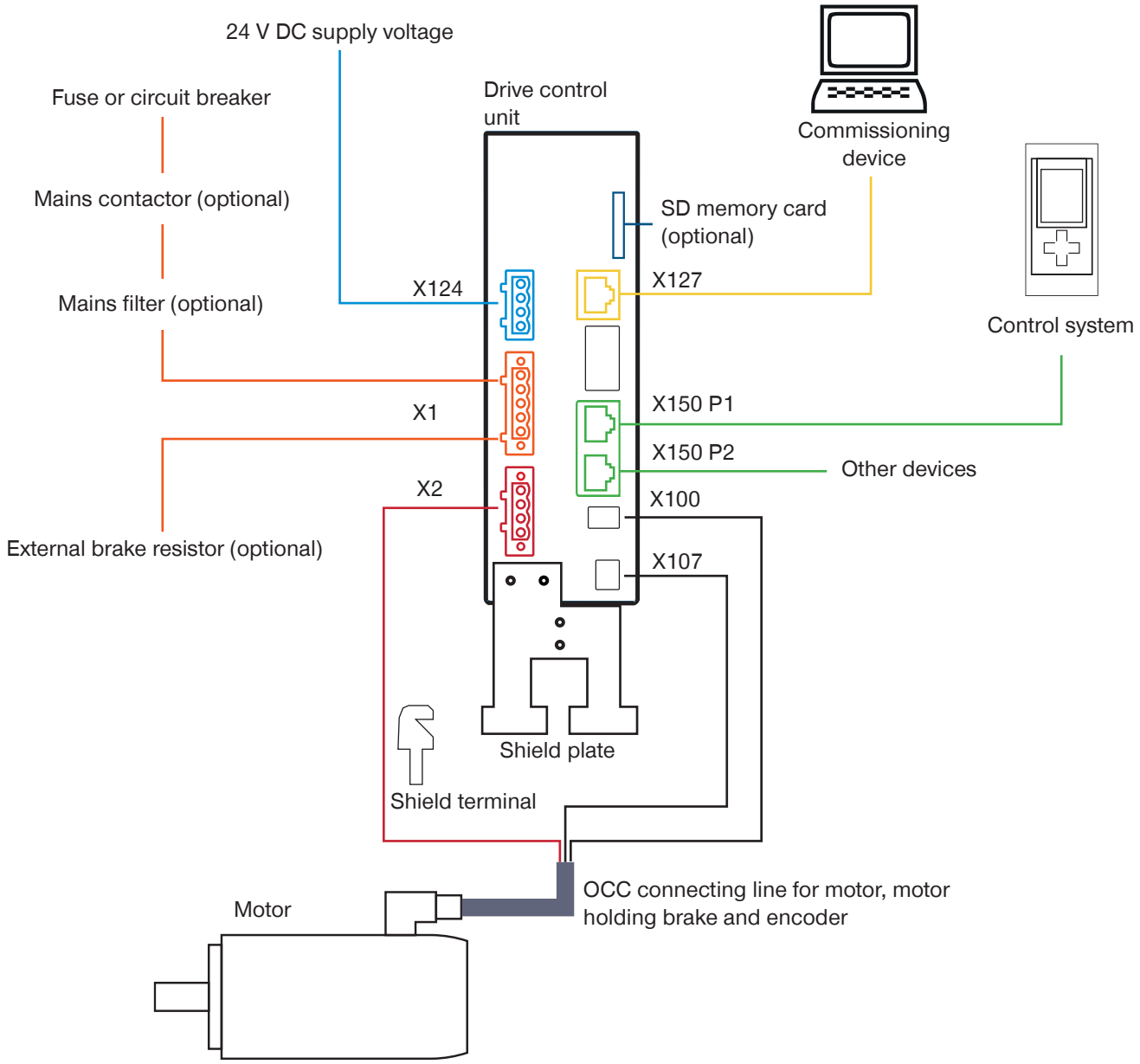

10.5.2.2 Supply with three-phase current

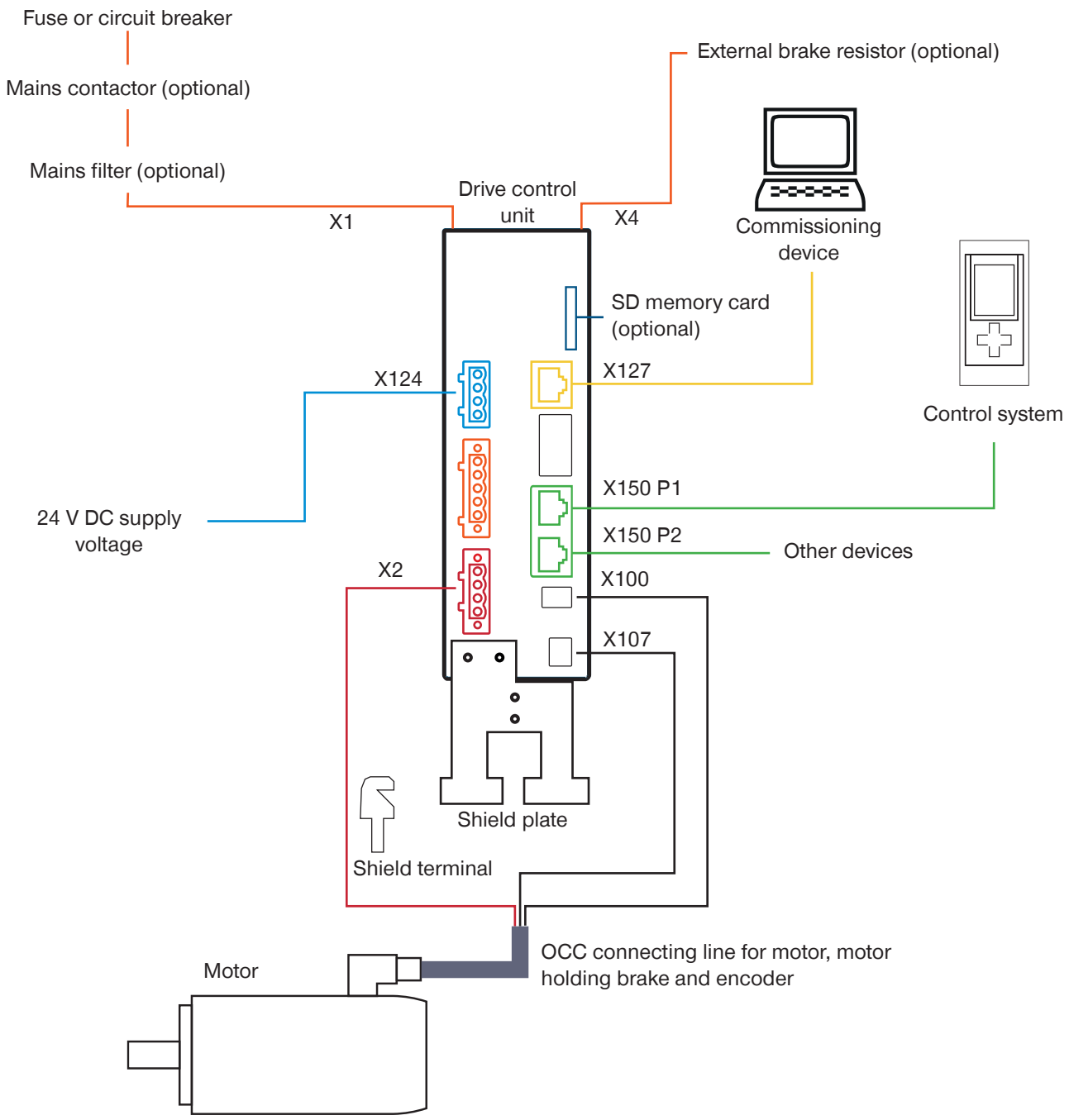

11 Commissioning

WARNING

Risk of injury due to uncontrolled movements

Injuries can result from being caught or wound up during the motion sequence.

► Ensure that no persons are within the movement range of the product.

CAUTION

Risk of injury and material damage in case of non-compliance

Clamping processes during movement can result in damage to the clamping element. A malfunction resulting from this can lead to injuries.

► Only clamp in the static state.

► Never use the clamping element as an emergency brake.

NOTICE

Material damage due to collision

The dampers are used to protect the product at low speeds. They are not designed to protect the product completely from damage at a higher speed and/or higher mass.

► Check the dampers after a strong collision and contact Customer Service.

INFORMATION

► For more information about the drive control system, refer to the documentation of the manufacturer.

11.1 Checking operational readiness

► Check that all components and connections are installed correctly.

► Check the energy supply.

► Check all mounting screws for the prescribed tightening torque.

11.2 Preparing for commissioning

INFORMATION

- For information on drive control system commissioning, refer to the documentation of the manufacturer.
  - https://cache.industry.siemens.com/dl/files/329/109754329/att_1122014/v1/S210_QIG_230V_0321_en-US.pdf
  - https://cache.industry.siemens.com/dl/files/769/109763769/att_1122021/v1/S210_QIG_400V_0321_en-US.pdf

INFORMATION

The devices can only be put into operation once they have been configured.

- Before configuration, remove the Profinet cables from the devices.

- Click *Load device as new station (hardware and software)* in the *Online* menu to integrate the drive control system into the Simatic TIA project.

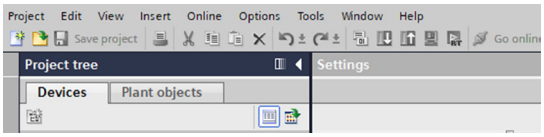

⇨ The drive control system was loaded to the project.

- In Project navigation, click *Configuration*.
- Check the setting of the drive control system, motor and, if necessary, holding brake.

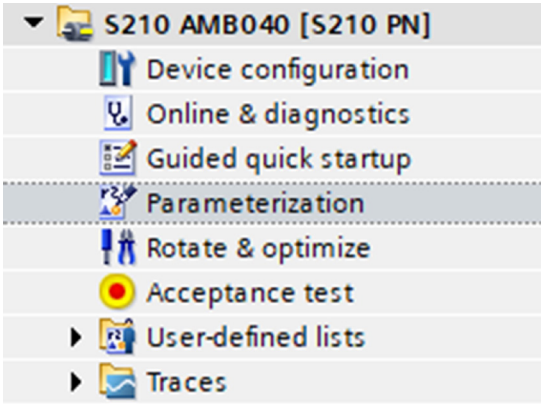

- Select the sense of rotation appropriate to the application.

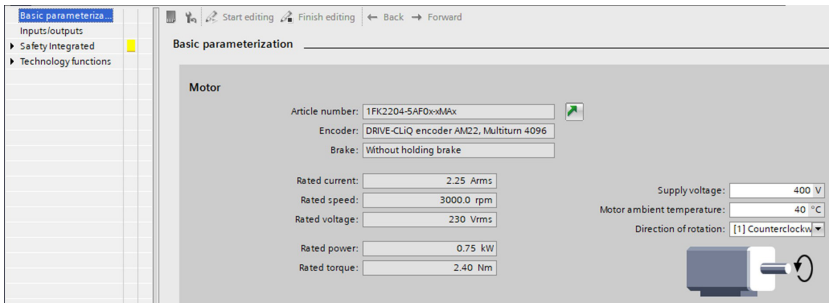

INFORMATION

- Compare the *part number* with the data on the type plate of the motor and drive control system in the *Motor* and *Encoder* menus.
- If the part numbers do not match, delete the drive control system by clicking the *Factory settings* icon.
- Then reload the drive control system to the project.

11.2.1 Device configuration

- ▶ Click *Device configuration* in Project navigation under the drive control system.
- ▶ Click *<Add telegram>* in *Telegram project planning*.

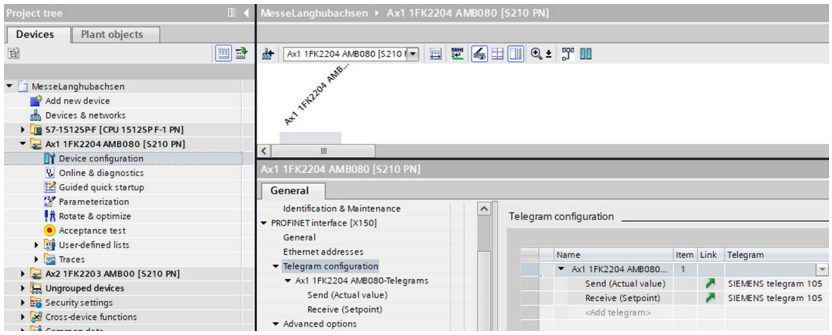

- ▶ Select the *<Add additional telegram torque>* option in the window.
- ⇨ The *Send torque (actual value)* telegram was added.
- ⇨ The *Receive torque (target value)* telegram was added.

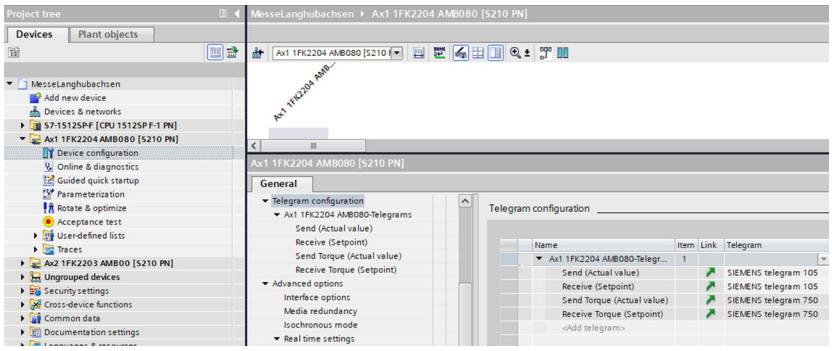

- ▶ Click *Cycle synchronization* in the *More options* window.
- ▶ Activate the *Cycle-synchronous operation* checkbox.

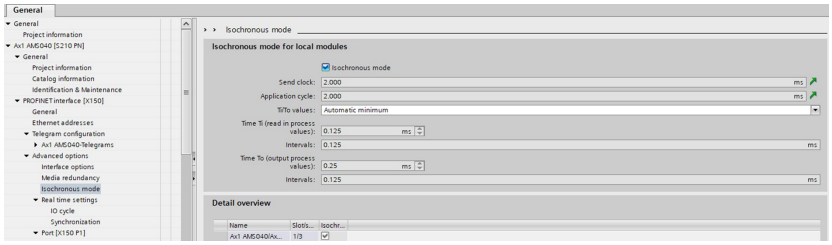

- ▶ Click *Real time settings* in the menu.
- ▶ Enter the desired synchronization settings.

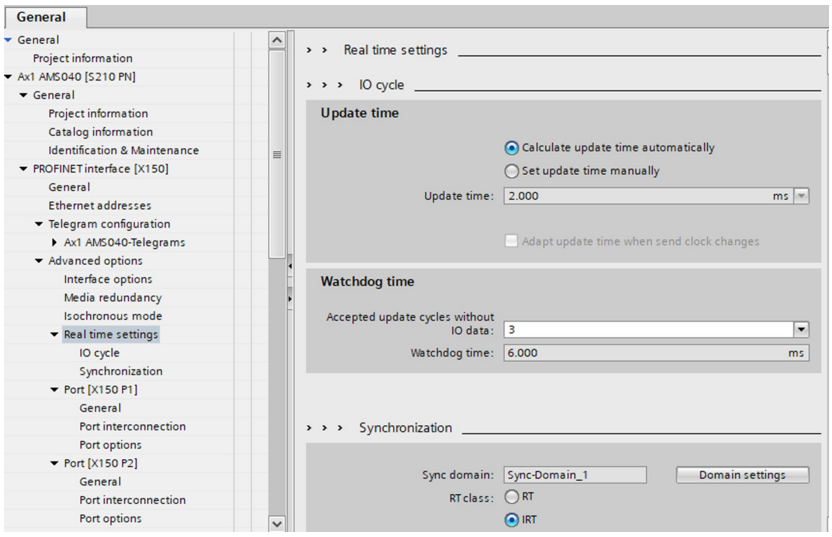

11.2.2 Configuring the drive control system

► In Project navigation, click *Turning & Optimization*.

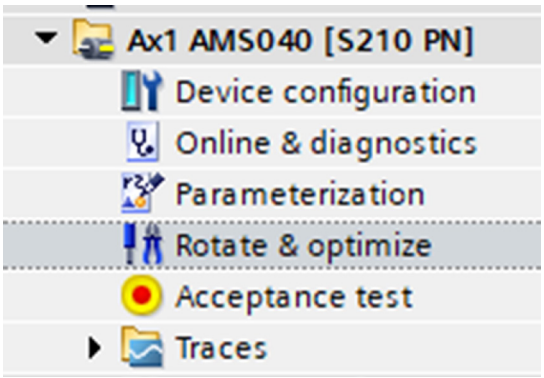

The *One Button Tuning* function is used to optimize control parameters.

► Click *One Button Tuning* in the menu.

► Make sure that the set path limit can be traversed without causing any danger to persons or machinery and no end position is touched.

► Click the *Start* button.

► Repeat the process several times with different values for the path limit.

► Move the product via the control panel.

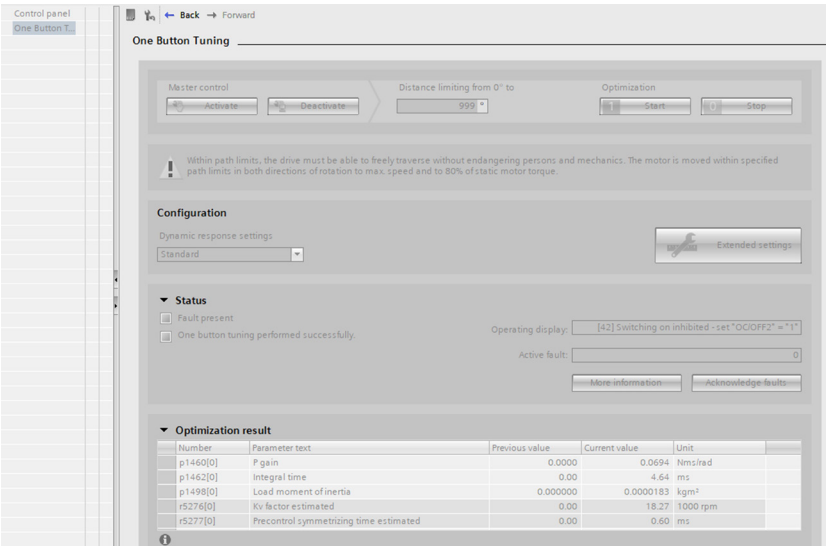

► Save the settings to the drive control system by clicking the *Save total device data to non-volatile memory* button.

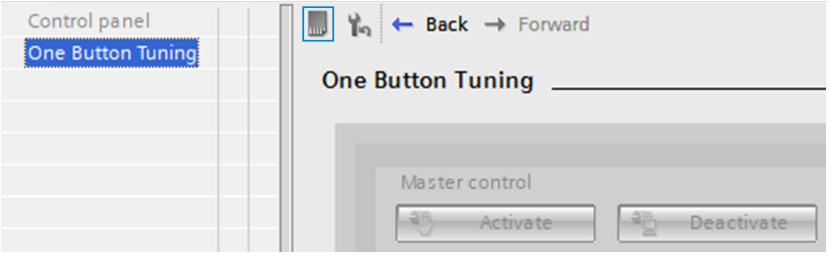

► In Project navigation, click the drive control system.

► Load the configuration to the Simatic-TIA project by clicking the *Load from device* button.

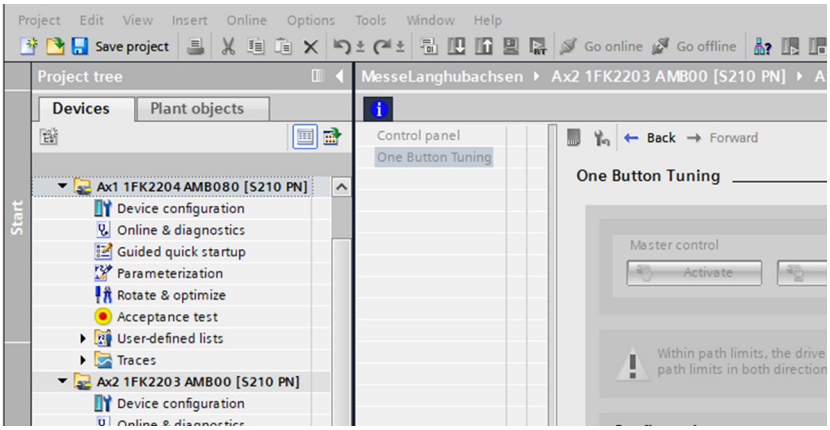

11.3 Making settings in the project

- In the project navigation pane, click *Devices & Networks* and select the exact cable path in the topology view.
  - Also make sure that the ports are connected correctly.

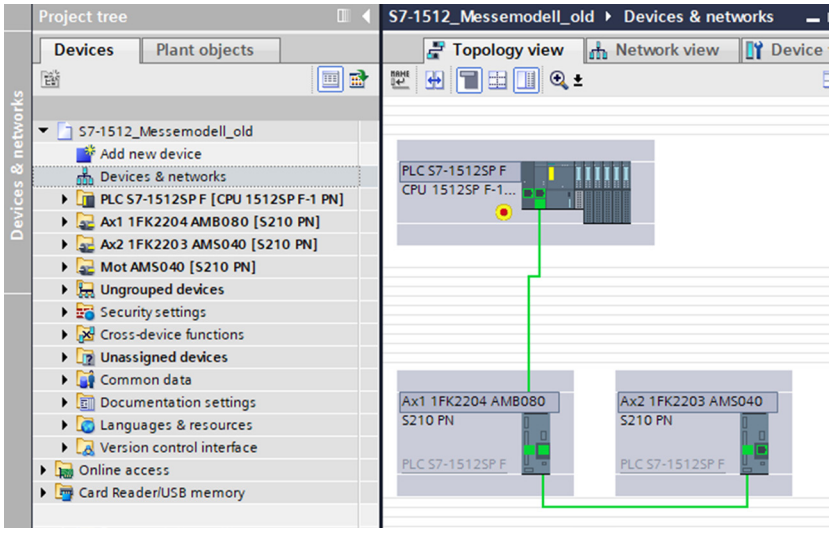

- Then check the settings in the control system and drive control system in the properties of the device view and adjust if necessary.
- Connect the devices to each other using the Profinet cables.

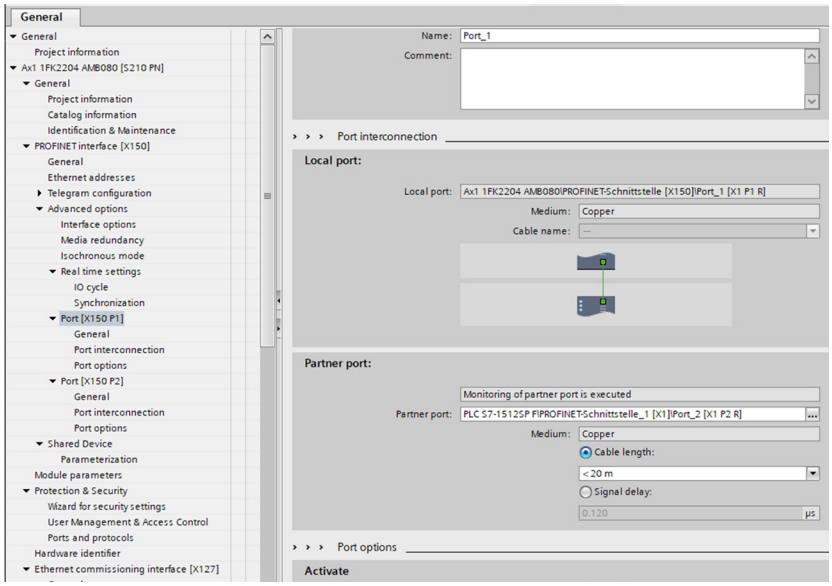

11.4 Adding technology objects

- ▶ In Project navigation, click *Technology objects* and then click *Add new object*.
- ▶ Select the *TO_PositioningAxis* technology object.
  - ▶ It is better to always select the latest version.
  - ▶ Note that this may be limited by the firmware of the CPU and drive control system.

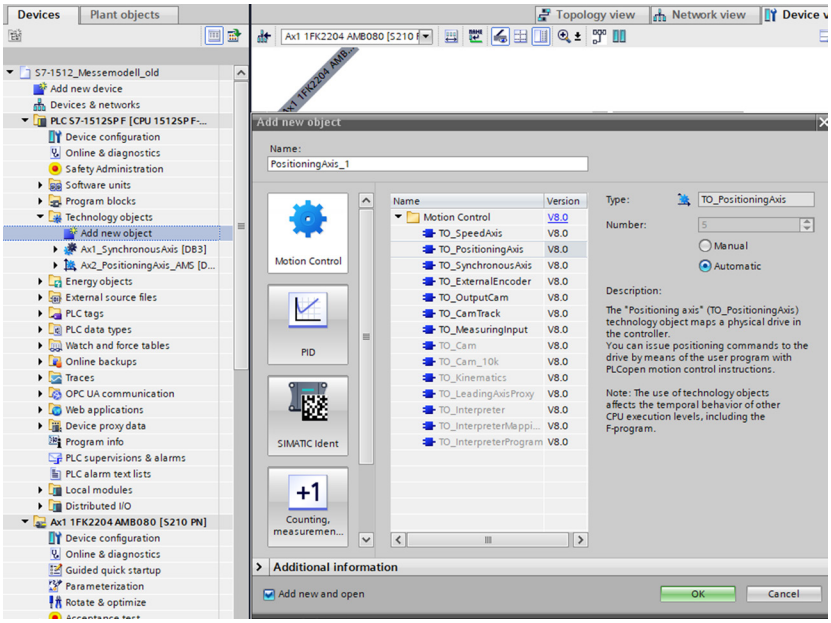

- ▶ Click *Configuration* in the Project navigation under *Technology objects*.
- ▶ In the *Hardware Interface* menu, click *Drive*.
- ▶ Select the corresponding drive.
- ⇨ All points receive a green or blue checkmark.

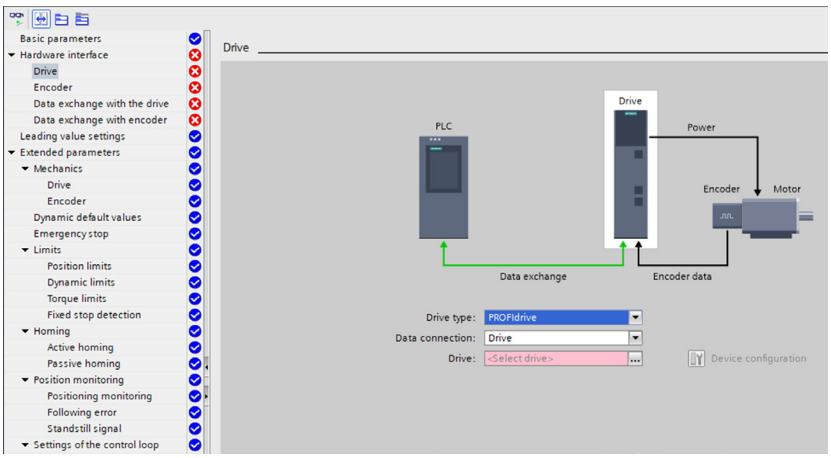

- ▶ In the *Hardware Interface* menu, click *Data exchange with the drive*.
- ▶ Activate the *Apply drive values automatically for project planning (offline)* checkbox.
- ▶ Activate the *Apply drive values automatically for the runtime (online)* checkbox.
- ▶ Activate the *Torque data* checkbox.
- ▶ In the *Data connection* drop-down menu, select the *Additional telegram* option.
- ▶ In the *Additional telegram* drop-down menu, select the telegram of the corresponding drive.

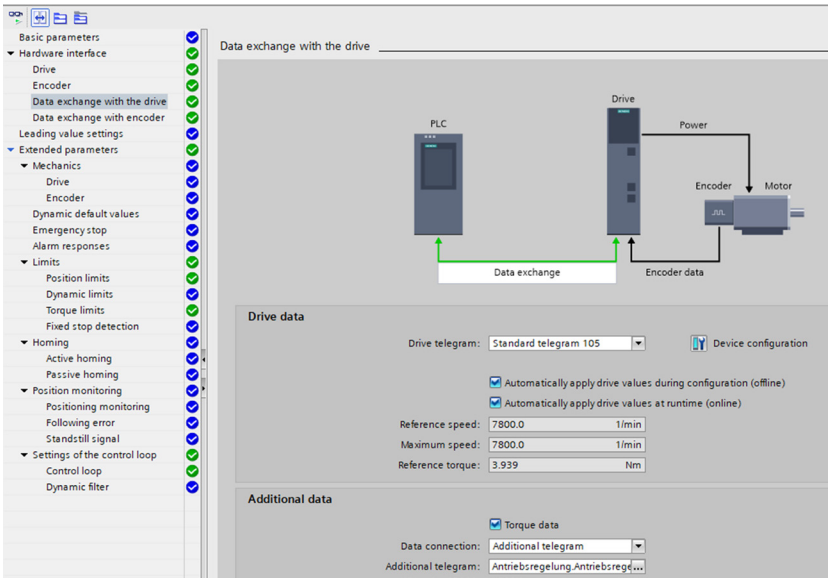

- ▶ In the *Advanced parameters* menu under *Mechanical*, select the *Drive* option.
- ▶ Enter the gearbox value in the *Number of motor revolutions* field.
- ▶ Enter the spindle pitch in the *Spindle pitch* field.
  - ▶ Refer to the values in the table in the “Product variants” section.

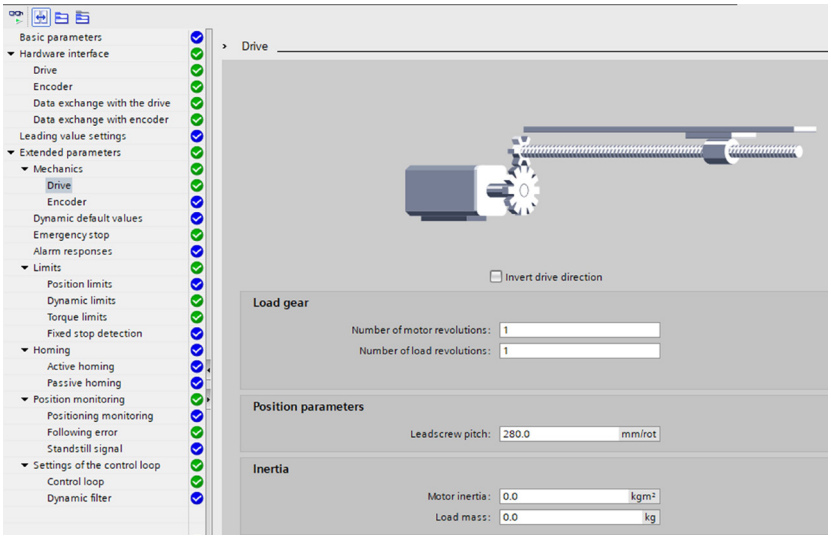

- ▶ Click *Dynamic pre-settings* in the *Advance parameters* menu.

The default values entered here can be used by the motion control modules if the identifier for the default is transmitted with the value -1.

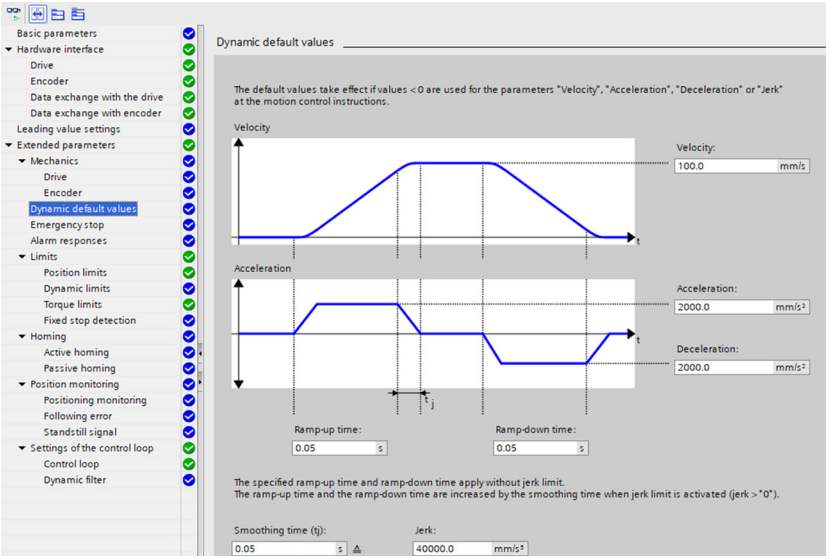

The product is brought to a standstill as quickly as possible with the maximum delay using the emergency stop delay.

- ▶ Click *Emergency stop* in the *Advance parameters* menu.
- ▶ Make sure that the resulting energy does not set the drive control system to an error state.
- ▶ Either install a brake resistor or provide a longer braking ramp.
- ▶ Enter the maximum value from the data sheet in the *Emergency stop delay* field.
- ⇨ The emergency stop return time is calculated automatically.

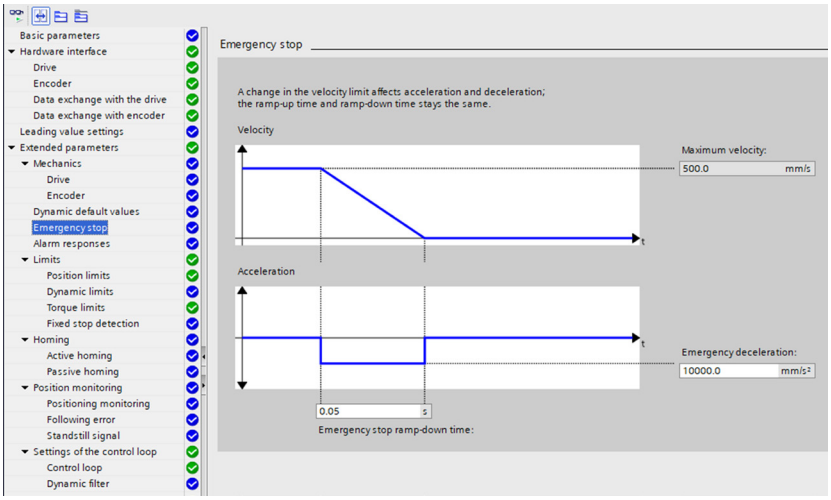

- In the *Advanced parameters* menu under *Limits*, select the *Position limits* option.
- Note that the software limit switch can only be used if a valid travel range was set.
- Make sure that the set end positions are located approx. 15 mm before the actual mechanical end positions.
- If necessary, install sensors (HW limit switches) between the software limit switches and the mechanical end positions.
  - Note that sensors are not required, because the product has an absolute encoder.
- For information on optional accessories and those included in the scope of delivery, refer to our website.
- Connect the sensors to the digital input card of the CPU.

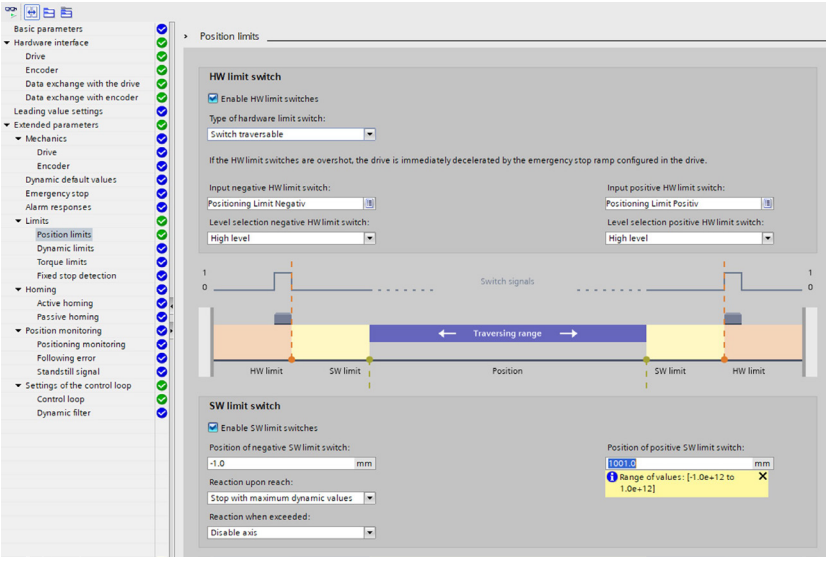

- In the *Advanced parameters* menu under *Limits*, select the *Dynamic limits* option.
- Enter the maximum speed of the product from the data sheet in the *Maximum speed* field.
- Enter the maximum acceleration of the product from the data sheet in the *Maximum acceleration* field.

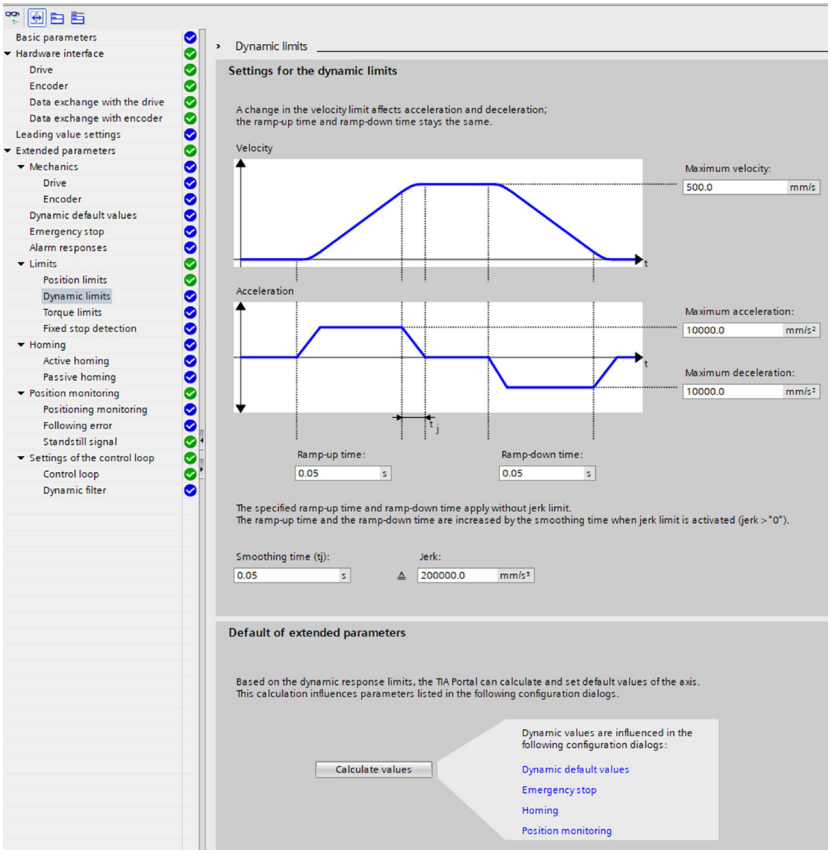

11.5 Referencing by Homing

No reference run is required, because the drive is equipped with a multiturn absolute encoder.
You only need to set the difference between the axis reference system and the encoder reference system one time.

- ► Make the application-specific settings in the *Position monitoring* menu.

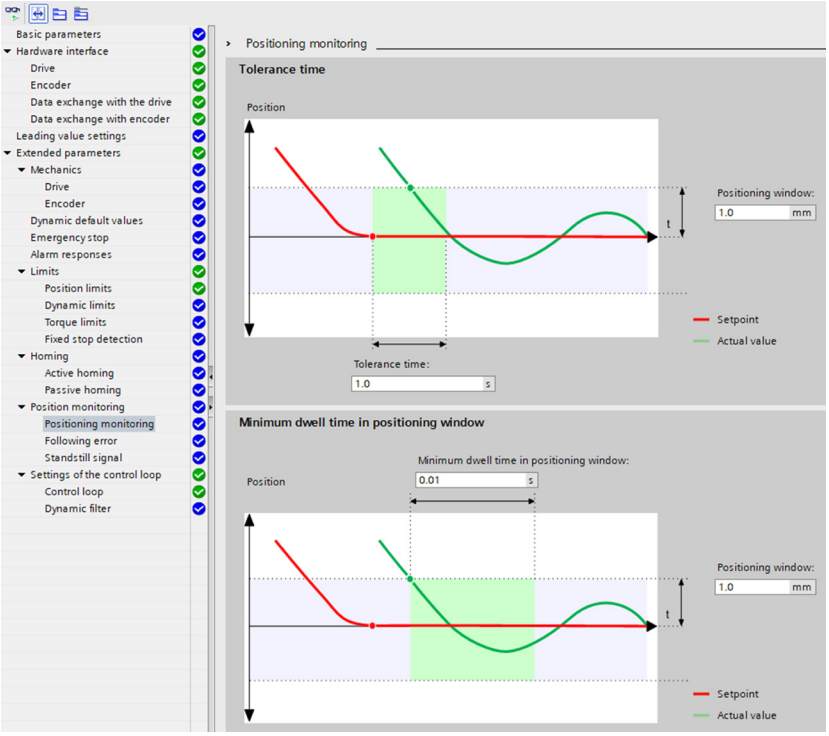

- ► Select the *Control loop* option in the *Control loop settings* menu.
- ► Click the *Apply values to drive* button in the *Positioning control* area.
- ► Click *Positioning control in drive (DSC activated)* in the *DSC* area.

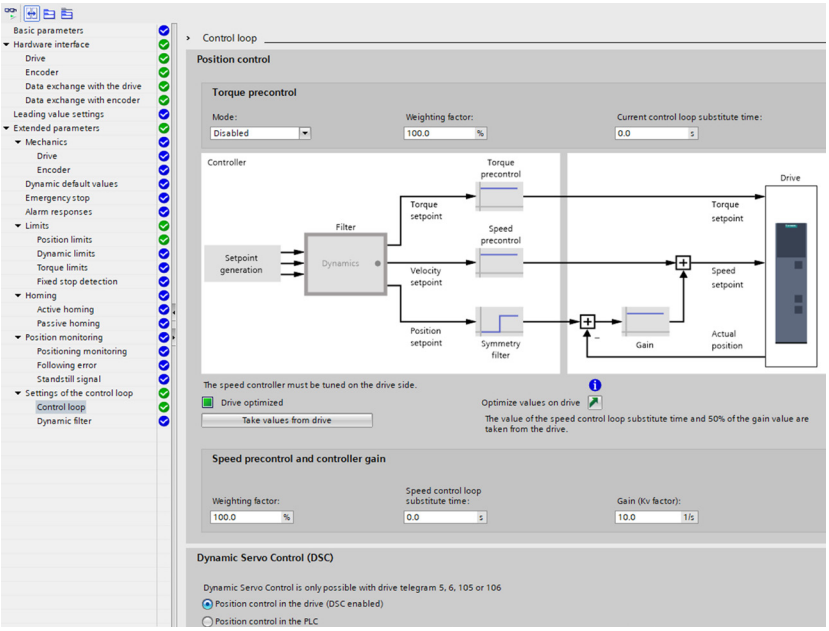

11.6 Using the function block

NOTICE

Disclaimer
This function block is used to simplify the control of a Zimmer Group product. However, the entire programming must be set individually for each application. The focus of this function block is on simple programming. For better performance, different programming may prove to be more suitable. Despite intensive testing, it cannot be ruled out that functions do not work correctly. Please check that the block is functioning properly for your application. The Zimmer Group assumes no legal or any liability for incorrect program functions and their consequences.

- ► Connect the inputs and outputs to the included function block.
- ► Select the data block with the application values for the *p_ApplicationValues* pointer.
  - ► Do not change the structure of the data block with application values.
- ⇨ Target and actual values can be exchanged with the drive control system using the data block assigned to *p_ApplicationValues*.
- ► Select the data block of the positioning axis technology object for the *p_PositioningAxis* pointer.
- ⇨ The function block communicates with the drive control system via the technology object.

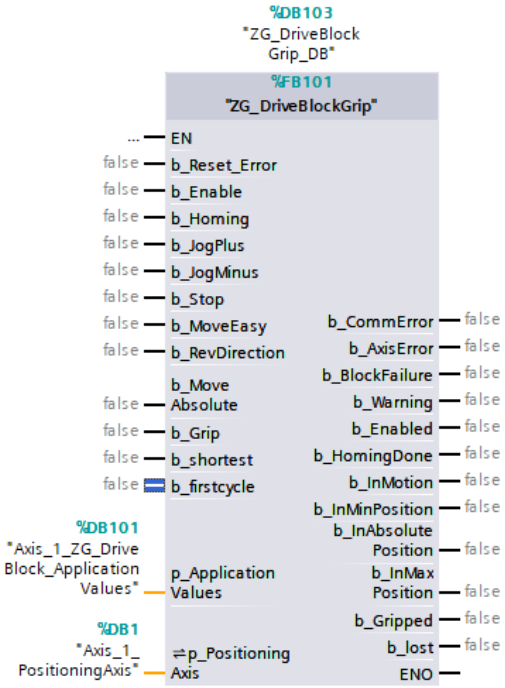

11.7 Function in the function block

11.7.1 Monitoring and switching on

11.7.1.1 b_Enable

The output stage is energized with this variable.

11.7.1.2 b_Enabled

This variable indicates that the output stage is energized.

11.7.1.3 b_InMotion

This variable indicates that the product is in motion.

11.7.1.4 b_CommError

This variable indicates a communication malfunction with the drive.

- ► Check the cable of the drive and control system.
- ► Check the settings in the device configuration and technology object.

11.7.1.5 b_AxisError

This variable indicates an error with the drive.

► If necessary, use the *e_StatusWord* and *e_ErrorWord* to determine the cause.

► Acknowledge the error via *b_Reset_Error*.

INFORMATION

► Refer to the document block that was assigned to *p_ApplicationValues* for a detailed description of *e_StatusWord* and *e_ErrorWord*.

- e_StatusWord
- e_StatusWord.X00_Enable
- e_StatusWord.X01_Error
- e_StatusWord.X02_RestartActive
- e_StatusWord.X03_OnlineStartValuesChanged
- e_StatusWord.X04_ControlPanelActive
- e_StatusWord.X05_HomingDone
- e_StatusWord.X06_Done
- e_StatusWord.X07_StandStill
- e_StatusWord.X08_PositioningCommand
- e_StatusWord.X09_JogCommand
- e_StatusWord.X10_VelocityCommand
- e_StatusWord.X11_HomingCommand
- e_StatusWord.X11_HomingCommand
- e_StatusWord.X13_Accelerating
- e_StatusWord.X14_Decelerating
- e_StatusWord.X15_SWLimitMinActive
- e_StatusWord.X16_SWLimitMaxActive
- e_StatusWord.X17_HWLimitMinActive
- e_StatusWord.X18_HWLimitMaxActive
- e_StatusWord.X23_MoveSuperimposedCommand
- e_StatusWord.X25_AxisSimualtion
- e_StatusWord.X27_InLimitation
- e_StatusWord.X28_NonPositionControlled

- e_ErrorWord
- e_ErrorWord.X00_SystemFault
- e_ErrorWord.X01_CofigFault
- e_ErrorWord.X02_UserFault
- e_ErrorWord.X03_CommandNotAccepted
- e_ErrorWord.X04_DriveFault
- e_ErrorWord.X05_SensorFault
- e_ErrorWord.X06_DynamicError
- e_ErrorWord.X07_CommunicationFault
- e_ErrorWord.X08_SW_Limit
- e_ErrorWord.X09_HW_Limit
- e_ErrorWord.X10_HomingFault
- e_ErrorWord.X11_FollowingErrorFault
- e_ErrorWord.X12_PositioningFault
- e_ErrorWord.X13_PeripheralError
- e_ErrorWord.X14_SynchronuousError
- e_ErrorWord.X15_AdaptionError

11.7.1.6 b_Warning

This variable indicates whether there are active warnings.

As soon as the cause of the warning has been eliminated, it is automatically canceled by the product and must not be acknowledged.

INFORMATION

► More information about warnings can be found in the instructions of the Sinamics S210.

11.7.1.7 b_Reset_Error

This variable is used to acknowledge errors.

11.7.2 References

11.7.2.1 f_SetHomePosition

This variable defines the reference system of the axis after referencing. The default value is 0.0.

11.7.2.2 b_Homing

This variable sets the value of *f_SetHomePosition* at the current position. This requires that *b_Enabled* is set to *true*.

► Repeat the process if mechanical changes are made between the linear system and the motor encoder.

INFORMATION

► Perform homing once during commissioning.

11.7.2.3 b_HomingDone

This variable indicates that the zero point was set.

11.7.2.4 b_Referenced_internal

This variable is required for internal storage.

NOTICE

Material damage and malfunction in case of non-compliance

► Do not make any changes to the variable.

Variable	Unit	Description	Source
b_Referenced_internal	Bool	Stored	MCHome.Done

11.7.3 Manual control

11.7.3.1 b_JogPlus

The product moves in the positive direction as long as this input is set.

This requires that *b_Enabled* is set to *true*.

11.7.3.2 b_JogMinus

The product moves in the negative direction as long as this input is set.

This requires that *b_Enabled* is set to *true*.

11.7.3.3 f_SetJogVelocity

The desired speed for *b_JogPlus* or *b_JogMinus* can be entered for this variable.

11.7.4 Easy Move motion

11.7.4.1 b_MoveEasy

The product moves to the position *f_SetEasyPositionMin* or *f_SetEasyPositionMax* as soon as this variable changes to *true*.

11.7.4.2 b_RevDirection

The product moves in the negative direction when this variable is set to *true* and *b_MoveEasy* is set to *true*.
The product moves in the positive direction when this variable is set to *false* and *b_MoveEasy* is set to *true*.

11.7.4.3 f_SetEasyAccelDecel

The desired acceleration and delay [mm/s^2] for *b_MoveEasy* can be entered for this variable.

11.7.4.4 f_SetEasyPositionMin

This variable defines the negative end position [mm].

11.7.4.5 f_SetEasyPositionMax

This variable defines the positive end position [mm].

11.7.4.6 f_SetEasyVelocity

The desired speed [mm/s] for *b_MoveEasy* can be entered for this variable.

11.7.4.7 f_SetEasyJerk

The desired jerk [mm/s³] for *b_MoveEasy* can be entered with this variable.

11.7.4.8 b_InMinPosition

This variable indicates that the product has moved to the negative end position.

11.7.4.9 b_InMaxPosition

This variable indicates that the product has moved to the positive end position.

11.7.5 Absolute movement

11.7.5.1 b_MoveAbsolute

The product moves to the *f_SetAbsPosition* position as soon as this variable switches to *true*.

11.7.5.2 f_SetAbsVelocity

The desired speed [mm/s] for *b_MoveAbsolute* can be entered for this variable.

11.7.5.3 f_SetAbsAccelDecel

The desired acceleration [mm/s²] for *b_MoveAbsolute* can be entered for this variable.

11.7.5.4 f_SetAbsJerk

The desired jerk [mm/s³] for *b_MoveAbsolute* can be entered with this variable.

11.7.5.5 b_InAbsolutePosition

This variable indicates that the product has moved to the *f_SetAbsPosition* position.

11.7.6 Setting and monitoring

11.7.6.1 b_FirstCycle

This variable sets the parameters for a PLC new start or restart. The temporary variables are read once from the non-volatile memory to save cycle time. The control system sets the variable to *true* during the first cycle.

► For further information, refer to the programming example on our website.

11.7.6.2 b_Stop

As soon as the variable is set to *true*, all current movement orders are interrupted and prevented from restarting.

11.7.6.3 f_ActualPostion

This variable outputs the current position [mm] of the product.

11.7.6.4 f_ActualVelocity

This variable outputs the current speed [mm] of the product.

11.7.6.5 f_ActualTorque

This variable outputs the current torque [Nm] of the product.

11.7.6.6 i_ActualForcePeCe

This variable outputs the current force [%] of the product.

12 Error diagnosis

Error	Possible cause	Measure
Carriage does not move.	• Coupling is slipping.	▶ Check that the coupling is assembled correctly.
		▶ Clean the coupling if it is dirty.
	• Ball screw gets stuck or no longer turns.	▶ Please contact Customer Service.
	• Load from customer-specific application is too high.	▶ Reduce the weight of the customer-specific application or accelerate the drive.
	• Error in drive	▶ For more information, refer to the "b_AxisError" section.
Carriage positioned inaccurately.	• Guide has play after a collision, impact or due to extreme load spikes.	▶ Please contact Customer Service.
	• Drive control system setup incomplete.	▶ Repeat the *One Button Tuning*, refer to the "Configuring the drive control system" section.
Programmed absolute position changes.	• Coupling is slipping.	▶ Check the tightening torque of the clamping screw and correct it if necessary.
		▶ Check the maximum induced drive torque and reduce it if necessary.
		▶ Clean the coupling if it is dirty.
Sensor does not react.	• Switching distance is too large.	▶ Reset the switching distance.
	• Sensor is defective or there is a cable break.	▶ Replace the limit switch.
	• Signal is not reaching the control system.	▶ Check the supply line to the control system.
Product makes unusual sounds or vibrates in an unusual manner during operation.	• Control parameters are incorrect.	▶ Check the control parameters.
	• Insufficient lubrication.	▶ Re-lubricate the carriage and ball screw.
	• There is bracing in the system.	▶ Check the flatness of the contact surface and customer-specific application and install the product without distortion if necessary.
	• Specified coupling distance was not maintained.	▶ Correct the distance between the clamping hub and expansion hub.
	• Guides are damaged.	▶ Please contact Customer Service.
Control system switches off due to overload.	• There is bracing in the system.	▶ Check the flatness of the contact surface and customer-specific application and install the product without distortion if necessary.
	• Insufficient lubrication.	▶ Re-lubricate the carriage and ball screw.
	• Axis and guides are dirty.	▶ Clean the product.
		▶ Check that the guides move freely.
Clamping element does not open or touches.	• No operating pressure or it is too low.	▶ Increase the operating pressure to the value listed in the technical data sheet.
	• The power supply is prevented due to leakage, blockage or crushing of the line.	▶ Check the energy supply for faults.

Error	Possible cause	Measure
Clamping element reacts after a delay.	• Supply air or exhaust air are insufficient.	► Check the size of the valve.
		► Keep the length of the line as short as possible.
		► Clean the air filter.
The product does not achieve the required holding force or holding torque.	• Mounting screws are loose.	► Check the tightening torques.
Leakage is audible.	• Seals have not been applied.	► Open and close the clamping element a min. of 10 times.
	• Connections are leaking.	► Check all valves and lines and replace if necessary.
	• The product has reached the end of its service life.	► Please contact Customer Service.

13 Maintenance

WARNING

Risk of injury from crushing

The carriage can sag and cause crushing if not used horizontally or if product variants are used that do not have a clamping element.

► Secure the carriage against being switched on unintentionally.

NOTICE

Material damage resulting from blowing out with compressed air

Blowing out the product with compressed air can cause malfunctions.

► Never purge the product with compressed air.

NOTICE

Material damage caused by unsuitable cleaning materials

Seals, insulation, coatings and other surfaces may be damaged by solvent-based cleaning agents.

► Make sure that no liquids penetrate the product.

► Use chemically and biologically neutral cleaning agents.

► Use cleaning agents that are categorized as being nonhazardous to health.

► Use soft, lint-free cloths for cleaning the surface.

The use of the following cleaning agents is strictly prohibited:

- Acetone
- Cleaning solvent
- Nitrocellulose thinner/turpentine oil (solvents)

The maintenance interval depends on the respective application. The higher the strain, the more frequently maintenance must be carried out.

► Note that the product could become damaged under the following circumstances:

- Dirty environment
- Improper use and use that does not comply with the performance data
- Permissible temperature range not observed

► Have maintenance work that requires disassembly of the product and which is not described in these instructions performed by Customer Service only.

⇨ Dismantling and reassembling the product without authorization may result in complications, as special installation equipment is required in some cases. Zimmer Group GmbH accepts no liability for any resulting malfunctions or damage.

13.1 Relubricating the product

NOTICE

Contamination of the environment due to escaping lubricants

Lubricants can escape through moving machine parts. This can lead to contamination of the machine, the workpiece and the environment.

► Remove leaking lubricant immediately and thoroughly.

INFORMATION

The relubrication work specified applies to each rail carriage.

Recommended lubricants:

- THK AFB-LF
- Klüber ISOFLEX NCA 15

Rail carriage		
Design size	**Interval**	**Relubrication quantity [cm³]**
40	nach 1000 km	0.2
60	nach 1000 km	0.25
80	nach 1000 km	0.75
120	nach 1000 km	1.5

Ball screw		
Design size	**Interval**	**Relubrication quantity per 1 m stroke [cm³]**
40	After 100 km	5
60	After 100 km	6
80	After 100 km	9
120	After 100 km	15

The product is delivered with initial lubrication. Opposing lubrication points are used to lubricate the same rail carriage.

The lubrication interval depends on the load, speed, cycle counter and environmental conditions.

► Remove the grub screws from the lubrication points.

► Install the lubricating nipples to the lubrication points.

► Place the nozzle of the lubrication gun on a lubrication point.

► Press the nozzle against the lubricating nipple.

► Inject the required amount of relubrication in several steps.

  ► Initially, only inject a portion of the lubricant.

  ► Move the carriage several times so that the lubricant is distributed.

  ► Repeat the process until reaching the required amount of relubrication.

► Repeat the process for all lubrication points.

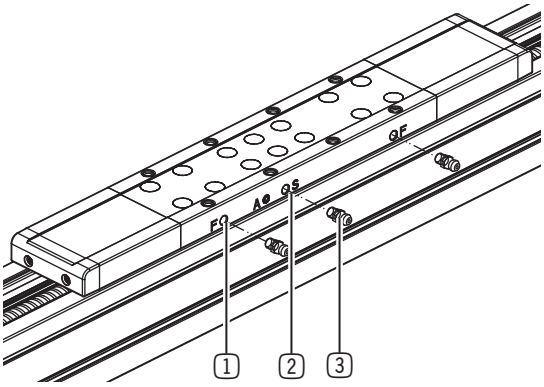

1 Lubrication point for rail carriage

2 Lubrication point for ball screw

3 Lubricating nipple

13.2 Replacing the cover strip

- ▶ Slightly loosen the clamping screws in the end blocks until the cover strip can pulled out.
- ▶ Remove the carriage end pieces.
- ▶ Remove the cover strip guides with the integrated pulleys.
- ▶ Pull the cover strip out of the carriage.
- ▶ Cut the new cover strip to the length of the old cover strip.
- ▶ Replace the old cover strip pulleys with new ones.
- ▶ Clean the product and the remaining removed components.
- ▶ Lightly lubricate the new cover strip on both sides.
- ▶ Thread the cover strip into the opening on one side of the carriage until it comes out the other side.
- ▶ Thread the cover strip over the pulleys and through the lower opening of the cover strip guides.

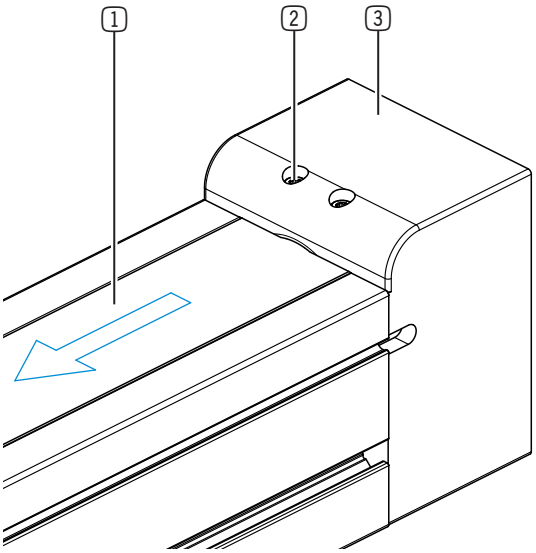

1 Cover strip

2 Clamping screw

3 End block

- ▶ Tighten the mounting screws of the cover strip guides.
- ▶ Thread the ends of the cover strip into the openings of both end blocks.
- ▶ Install the cover strip to the end blocks by tightening the clamping screws.
- ▶ Install the carriage end pieces.

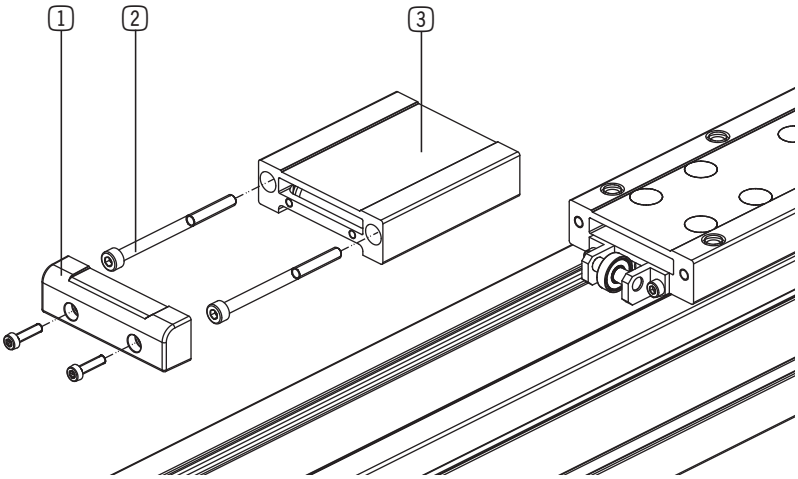

1 Carriage end piece

2 Mounting screw

3 Cover strip guide

- ▶ Check that the cover strip is seated correctly in the axis profile.
- ▶ Check the installation by moving the carriage to both end positions.
  - ▶ Make sure that the movement meets no resistance.
- ▶ Check again that the cover strip is seated correctly after a few hours of operation.

14 Decommissioning/disposal

INFORMATION

When the product reaches the end of its operational phase, it can be disposed of.

- ▶ Disconnect the product completely from the power supply.
- ▶ Comply with the locally applicable environmental and disposal regulations.

15 RoHS declaration

in terms of the EU Regulation 2011/65/EU

Name and address of the manufacturer:

Zimmer Group GmbH

Am Glockenloch 2
77866 Rheinau, Germany
+49 7844 9138 0
info@zimmer-group.com
www.zimmer-group.com

We hereby declare that the incomplete machine described below

Product designation:	Linear axis with spindle drive
Type designation:	AMS

conforms to the requirements of the directive in its design and the version we put on the market.

Michael Hoch	Rheinau, Germany, 2024-10-28	
Authorized representative for compiling the relevant technical documents	(Place and date of issuance)	Martin Zimmer (Legally binding signature) Managing Partner

16 Declaration of Incorporation (Machinery Directive)

In terms of the EU Machinery Directive 2006/42/EC (Annex II 1 B)

Name and address of the manufacturer:

Zimmer Group GmbH

Am Glockenloch 2
77866 Rheinau, Germany
+49 7844 9138 0
info@zimmer-group.com
www.zimmer-group.com

We hereby declare that the incomplete machine described below

Product designation:	Linear axis with spindle drive
Type designation:	AMS

conforms to the requirements of the Machinery Directive, 2006/42/EC, Article 2g, Annex VII, b – Annex II, b, in its design and the version we put on the market.

We hereby confirm that all the relevant basic health and safety requirements for the product have been observed and implemented.

A full list of applied standards can be obtained from the manufacturer.

We also declare that the specific technical documents were produced in accordance with Annex VII Part B of this Directive. We undertake to provide the market supervisory bodies with electronic versions of special documents for the incomplete machine through our documentation department, should they have reason to request them.

The incomplete machine may only be commissioned if it has been ascertained, if applicable, that the machine or system in which the incomplete machine is to be installed satisfies the requirements of Directive 2006/42/EC on Machinery and an EC Declaration of Conformity has been drawn up in accordance with Annex II 1 A.

Kurt Ross	Rheinau, Germany, 2024-10-28	
Authorized representative for compiling the relevant technical documents	(Place and date of issuance)	Martin Zimmer (Legally binding signature) Managing Partner

17 Declaration of Incorporation

In terms of the EU Machinery Regulation 2023/1230, Annex V, Part B

Name and address of the manufacturer:

Zimmer Group GmbH

Am Glockenloch 2
77866 Rheinau, Germany
+49 7844 9138 0
info@zimmer-group.com
www.zimmer-group.com

We hereby declare that the incomplete machine described below

Product designation:	Linear axis with spindle drive
Type designation:	AMS

in their design and in the version we have placed on the market comply with the requirements of Regulation 2023/1230, Article 3.10, Annex III, Annex IV, Part B and Annex V, Part B.

A complete list of the standards applied and the essential health and safety requirements is available from the manufacturer.

The incomplete machine must not be commissioned until it has been determined that - where applicable - the machine into which the incomplete machine is to be incorporated complies with the provisions of EU Machinery Regulation 2023/1230 and the EC Declaration of Conformity has been issued in accordance with Annex V, Part A.

Kurt Ross	Rheinau, Germany, 2027-01-20	
Authorized representative for compiling the relevant technical documents	(Place and date of issuance)	Martin Zimmer (Legally binding signature) Managing Partner