► SERIES DSV - PRESSURE SAFETY VALVE

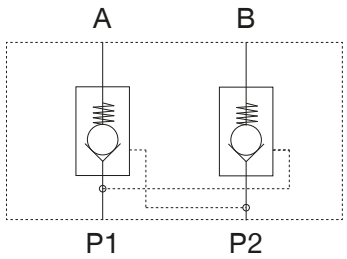

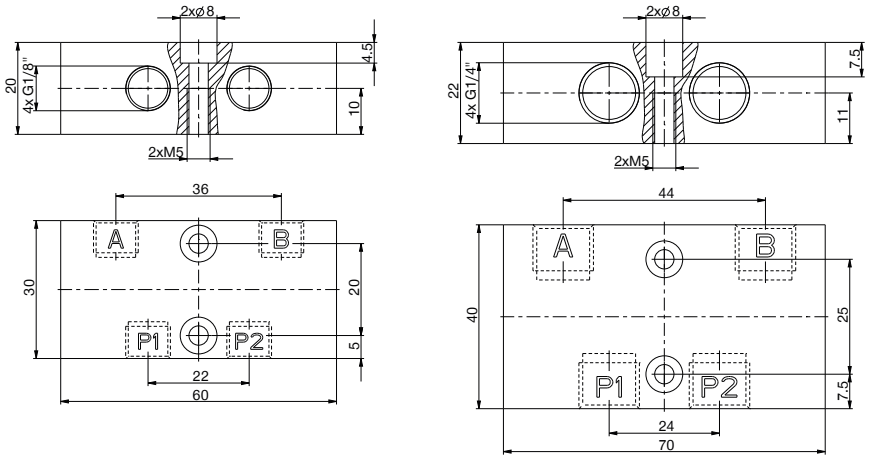

► **Technical data**

Order no.	DSV1-8	DSV1-4
Fixing thread	G1/8"	G1/4"
Quick Exhaust	No	No
Nominal diameter [mm]	4	7
Nominal flow rate A-P1 [Nl/min]	360	1000
Nominal flow rate B-P2 [Nl/min]	360	1000
Nominal flow rate P1-A [Nl/min]	230	650
Nominal flow rate P2-B [Nl/min]	230	650
Leakage max. [cm³/h]	3	10
Operating pressure [bar]	1 ... 10	1 ... 10
Operating temperature [°C]	-10 ... +70	-10 ... +70
Certifications	LABS / REACH / RoHS	LABS / REACH / RoHS
Weight [kg]	0.16	0.27

▶ DSV SERIES – PRESSURE SAFETY VALVES WITH QUICK EXHAUST

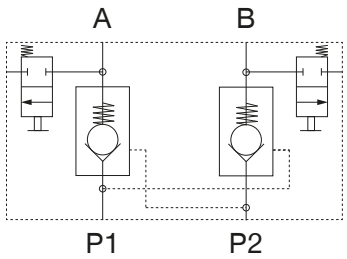

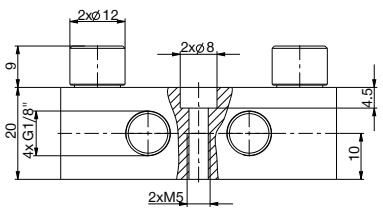

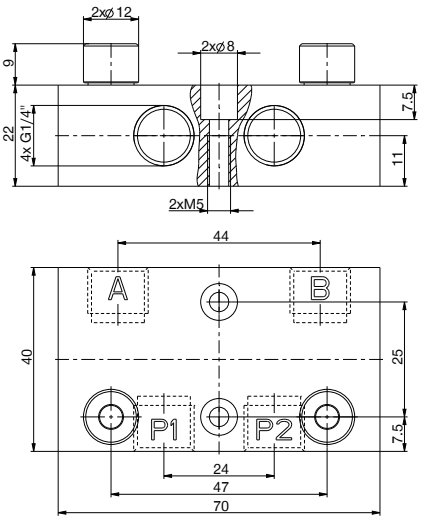

▶ **Technical data**

Order no.	DSV1-8E	DSV1-4E
Fixing thread	G1/8"	G1/4"
Quick Exhaust	Yes	Yes
Nominal diameter [mm]	4	7
Nominal flow rate A-P1 [Nl/min]	360	1000
Nominal flow rate B-P2 [Nl/min]	360	1000
Nominal flow rate P1-A [Nl/min]	230	650
Nominal flow rate P2-B [Nl/min]	230	650
Leakage max. [cm³/h]	3	10
Operating pressure [bar]	1 ... 10	1 ... 10
Operating temperature [°C]	-10 ... +70	-10 ... +70
Certifications	LABS / REACH / RoHS	LABS / REACH / RoHS
Weight [kg]	0.17	0.27

▶ FUNCTIONAL DESCRIPTION DSV

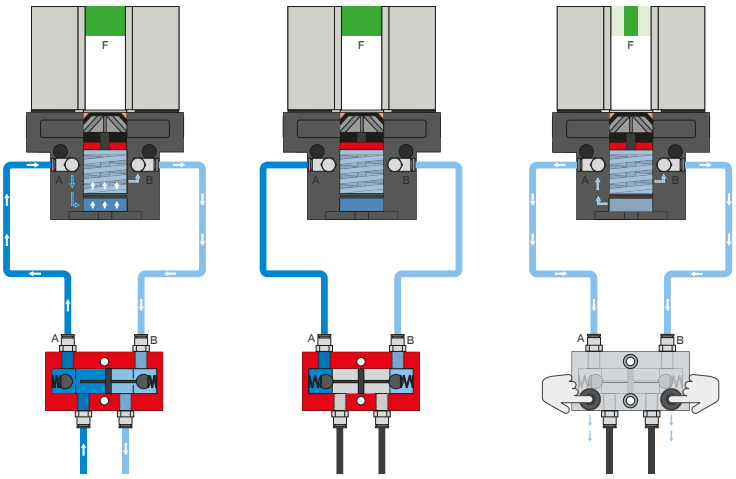

Pressure safety valve – DSV

Ensures safe retention of force and position if the system pressure drops

The integrated double check valve, which can be unlocked, retains the system pressure of the gripper in case of EMERGENCY STOP. To ensure the function, the valve must be installed as close to the gripper's air connection as possible. In variant E, two pushbuttons are installed that allow for controlled bleeding of the gripper.

▶ SERIES DEV - QUICK EXHAUST VALVE

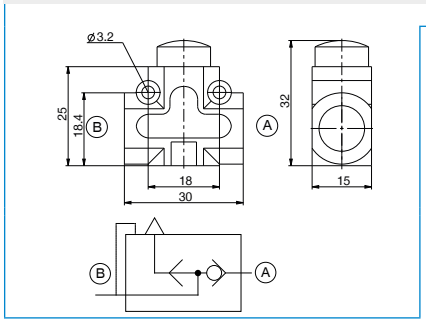

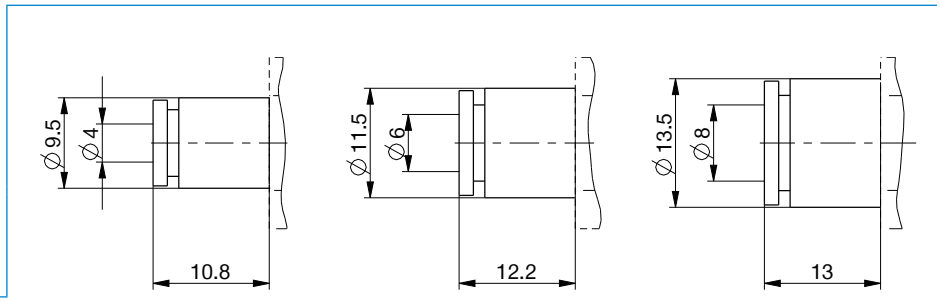

▶ **Technical data**

Order no.	DEV04	DEV06	DEV08
Outside-Ø for hose [mm]	4	6	8
Operating pressure max. [bar]	10	10	10
Nominal operating pressure [bar]	6	6	6
Operating temperature [°C]	-5 ... +50	-5 ... +50	-5 ... +50
Flow in the case of aeration [Nl/min]	250	250	250
Flow in the case of ventilation [Nl/min]	500	500	500
Certifications	LABS / REACH / RoHS	LABS / REACH / RoHS	LABS / REACH / RoHS
Weight [kg]	0.015	0.015	0.015

▶ FUNCTIONAL DESCRIPTION DEV

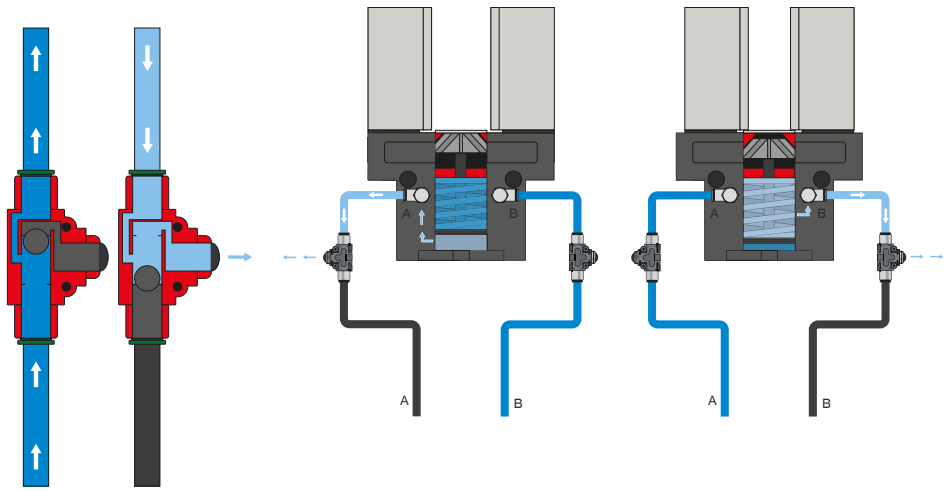

Quick exhaust valve – DEV

For rapid bleeding of the compressed air and preventing back pressure

The inline valves make a faster cycle time possible and prevent the formation of condensate in grippers with a small cylinder volume. To ensure the function, the valve must be installed as close to the gripper's air connection as possible.