3-JAW CONCENTRIC GRIPPERS
SERIES GD

▶ PRODUCT ADVANTAGES

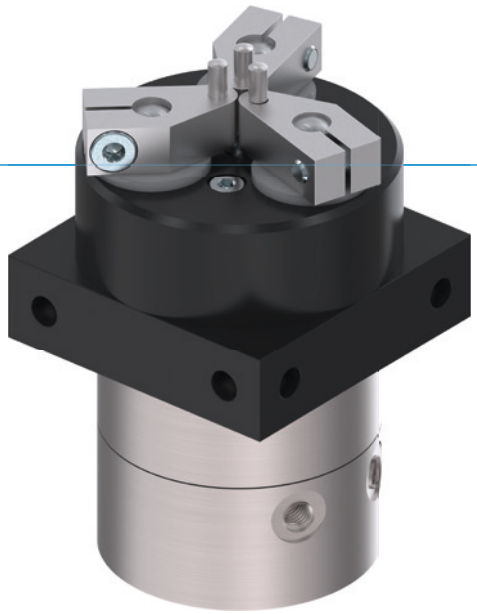

“The flexible”

- **Largest stroke in small installation space**

  You can cover numerous application variants with just one gripper type

- **Gripper jaws included in the delivery**

  Reduces your design effort, manufacturing costs and setup time

- **Smooth stroke configuration**

  Using the optionally available stroke limit, you can customise the stroke to your application, even stroke sensing is possible

▶ SERIES CHARACTERISTICS

	Installation size
	GDXX
10 million maintenance-free cycles (max.)	●
Inductive sensor	●
IP40	●

▶ BENEFITS IN DETAIL

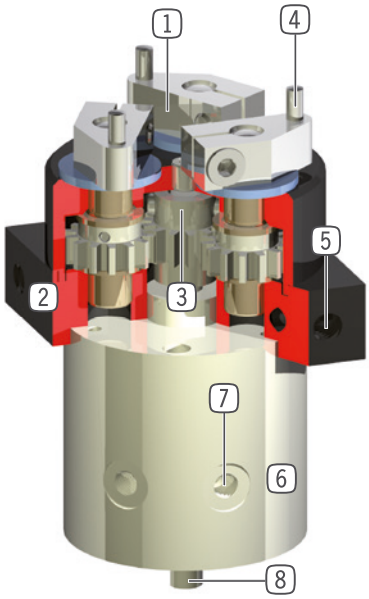

1 **Gripping movement on rotation**
- for various workpiece diameters

2 **Robust, lightweight housing**
- Hard-coated aluminum alloy

3 **Planetary transmission**
- synchronized the movement of the gripper jaws

4 **Standard pins serve as gripper jaw**

5 **Mounting and positioning**
- mounting possible from several sides for versatile positioning

6 **Drive**
- double-acting pneumatic cylinder

7 **Energy supply**
- possible radial and axial

8 **Shaft projection**
- for accessory assembly e.g. sensors

▶ TECHNICAL DATA

Installation size	Stroke [°]	Gripping moment [Nm]	Weight [kg]	IP class
GD1	130	0,12	0.08	IP40
GD10	180	1	0.22	IP40
GD50	120	9	2.7	IP40

▶ FURTHER INFORMATION IS AVAILABLE ONLINE

All information just a click away at: www.zimmer-group.com. Find data, illustrations, 3D models and operating instructions for your installation size using the order number for your desired product. Quick, clear and always up-to-date.

3-JAW CONCENTRIC GRIPPERS
INSTALLATION SIZE GD10

▶ PRODUCT SPECIFICATIONS

▶ Forces and moments

Displays static forces and moments that can also have an effect, besides the gripping force.

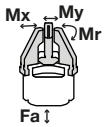

Mr [Nm]	1
Mx [Nm]	1
My [Nm]	0.5
Fa [N]	30

▶ RECOMMENDED ACCESSORIES

ENERGY SUPPLY

GVM5
Straight Fittings - Quick Connect Style

DEV04
Quick Exhaust Valve

DSV1-8
Pressure safety valve

ENERGY SUPPLY

DSV1-8E
Pressure safety valve with quick exhaust

CONNECTIONS / OTHER

DB10
Rotation limiter

▶ RECOMMENDED ACCESSORY ROTATION LIMITER

NJ12-E2S
Inductive proximity switch, M12

AI-M8X1-38
Stop Stroke Adjustment Screws

AI-M8X1-53
Stop Stroke Adjustment Screws

KAG500
Plug-in connector Straight Cable 5m - female connector M8

	► Technical data
Order no.	**GD10**
Stroke per jaw [°]	180
Gripping diameter in closing min. [mm]	5
Gripping diameter in closing max. [mm]	45
Gripping diameter in opening min. [mm]	11
Gripping diameter in opening max. [mm]	51
Gripping moment in closing [Nm]	1
Gripping moment in opening [Nm]	1
Closing time [s]	0.07
Opening time [s]	0.07
Repetition accuracy +/- [mm]	0.05
Operating pressure [bar]	3 ... 8
Nominal operating pressure [bar]	6
Operating temperature [°C]	+5 ... +60
Air volume per cycle [cm³]	20
Certifications	LABS / REACH / RoHS
Protection to IEC 60529	IP40
Weight [kg]	0.22

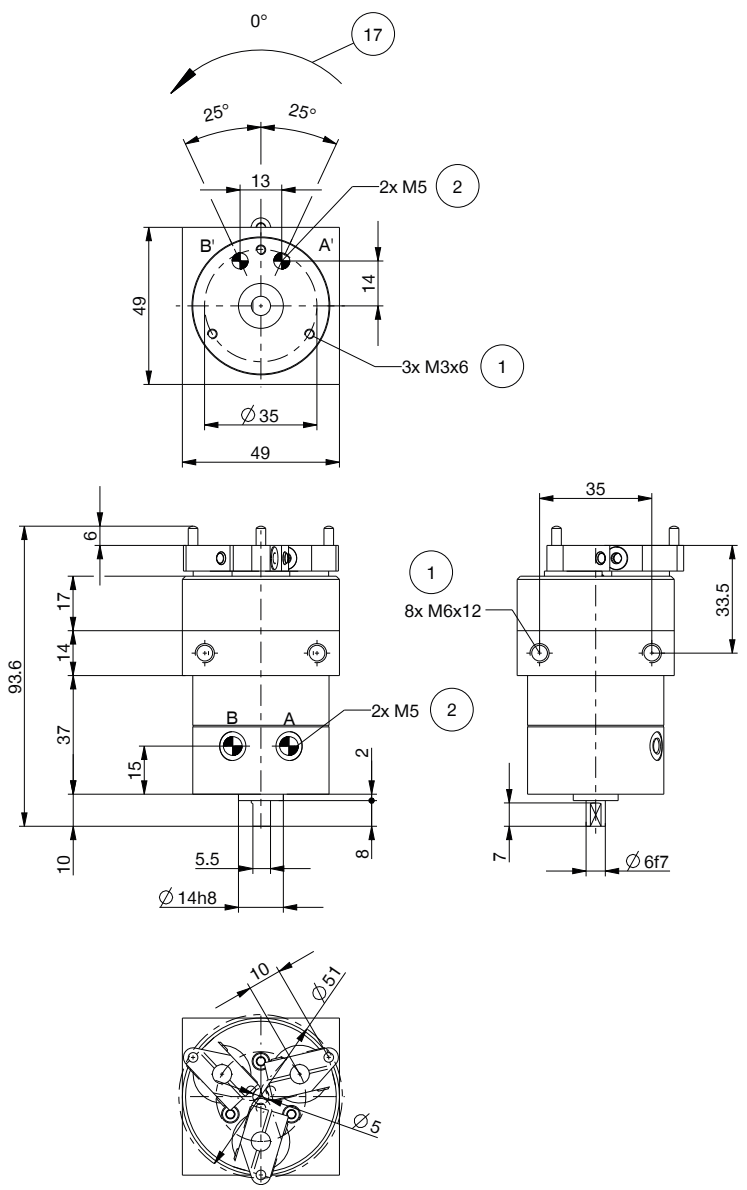

1 Gripper attachment
2 Energy supply
3 Fixing for gripper finger
17 Direction of rotation
A Air connection (close)
B Air connection (open)
A' Air connection, alternative (close)
B' Air connection, alternative (open)