3-JAW CONCENTRIC GRIPPERS
SERIES GD300

▶ PRODUCT ADVANTAGES

“The economical”

- **Concentration on the essentials**

  The most economic type of gripping: This is how you reduce your production costs

- **Proven T slot guide**

  This established and proven guiding technology stands for the highest process reliability like no other

- **Compact structure**

  Reduces the interference contours for your application

▶ SERIES CHARACTERISTICS

Installation size	Version					
GD3XX	N	NC	NO	S	SC	SO
Spring closing C		●			●	
Spring opening O			●			●
High-strength S				●	●	●
10 million maintenance-free cycles (max.)	●	●	●	●	●	●
Inductive sensor	●	●	●	●	●	●
Magnetic field sensor	●	●	●	●	●	●
Purged air	●	●	●	●	●	●
IP40	●	●	●	●	●	●

▶ BENEFITS IN DETAIL

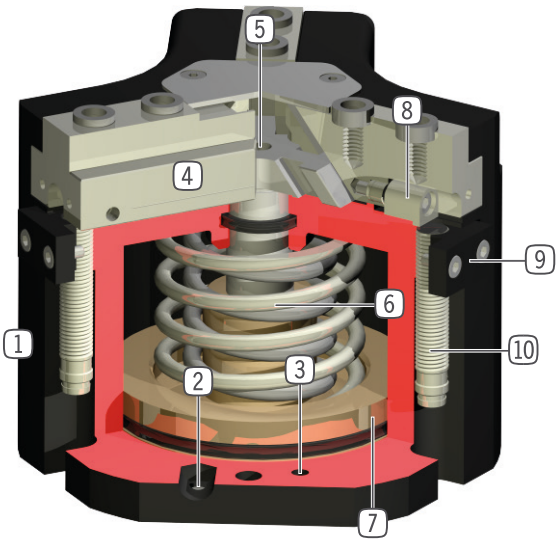

1 **Robust, lightweight housing**
- Hard-coated aluminum alloy

2 **Energy supply**
- possible from several sides

3 **Mounting and positioning**
- mounting possible from several sides for versatile positioning

4 **Gripper jaw**
- individual gripper finger mounting

5 **Wedge hook mechanism**
- synchronized the movement of the gripper jaws
- high force transfer

6 **Integrated gripping force safety device**
- spring integrated into cylinder as energy storage

7 **Position sensing**
- permanent magnet for direct monitoring of piston movement

8 **Integrated, adjustable switch cam**
- for direct position sensing of the gripper jaw

9 **Mounting block**
- mounting for inductive proximity switch (10)

▶ TECHNICAL DATA

Installation size	Stroke per jaw [mm]	Gripping force [N]	Weight [kg]	IP class
GD303	3	200 - 300	0,13 - 0,16	IP40
GD304	2 - 4	450 - 1500	0,22 - 0,28	IP40
GD306	3 - 6	750 - 2300	0,5 - 0,65	IP40
GD308	4 - 8	1200 - 4000	0,85 - 1,2	IP40
GD310	5 - 10	2000 - 6400	1,6 - 2,2	IP40
GD312	6 - 12	3500 - 9250	2,7 - 3,8	IP40
GD316	8 - 16	6500 - 19100	5,1 - 8	IP40
GD320	10 - 20	8200 - 18700	9,6	IP40
GD330	15 - 30	15300 - 34700	24	IP40

▶ FURTHER INFORMATION IS AVAILABLE ONLINE

All information just a click away at: www.zimmer-group.com. Find data, illustrations, 3D models and operating instructions for your installation size using the order number for your desired product. Quick, clear and always up-to-date.

3-JAW CONCENTRIC GRIPPERS
INSTALLATION SIZE GD306

▶ PRODUCT SPECIFICATIONS

▶ Gripping force diagram

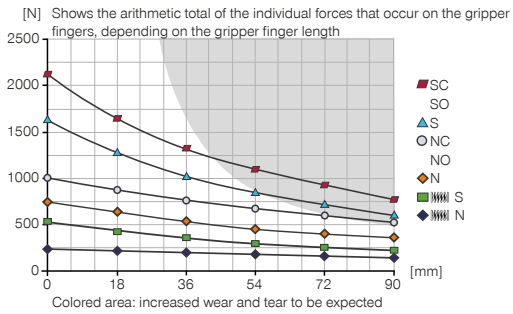

▶ Forces and moments

Displays static forces and moments that can also have an effect, besides the gripping force.

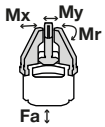

Mr [Nm]	35
Mx [Nm]	50
My [Nm]	45
Fa [N]	1200

▶ INCLUDED IN DELIVERY

3 [piece]
Mounting block
KB3-39

6 [piece]
Centering Disc
DST40600

▶ RECOMMENDED ACCESSORIES

GRIPPING COMPONENTS

UB306
Universal jaw set aluminium

UB306ST
Universal jaw set steel

ADS306N-S
Pressure piece N / S

ADS306C-O
Pressure piece NC / NO / SC / SO

ENERGY SUPPLY

GVM5
Straight Fittings - Quick Connect Style

WVM5
Angled Fittings - Quick Connect Style

ENERGY SUPPLY

DSV1-8
Pressure safety valve

DSV1-8E
Pressure safety valve with quick exhaust

SENSORS

NJ8-E2S
Inductive proximity switch – M8

MFS01-S-KHC-P1-PNP
Magnetic field sensor angled, cable 0.3 m - M8 connector

MFS02-S-KHC-P1-PNP
Magnetic field sensor straight, cable 0.3 m - M8 connector

MFS02-S-KHC-IL
Straight position sensor, cable 0.3 m – M8 plug

	► Technical data					
Order no.	**GD306N-C**	**GD306NC-C**	**GD306NO-C**	**GD306S-C**	**GD306SC-C**	**GD306SO-C**
Stroke per jaw [mm]	6	6	6	3	3	3
Gripping force in closing [N]	750	1000		1600	2150	
Gripping force in opening [N]	800		1050	1750		2300
Gripping force secured by spring min. [N]		250	250		550	550
Closing time [s]	0.03	0.03	0.05	0.03	0.03	0.05
Opening time [s]	0.03	0.05	0.03	0.03	0.05	0.03
Repetition accuracy +/- [mm]	0.05	0.05	0.05	0.05	0.05	0.05
Operating pressure min. [bar]	2	4	4	2	4	4
Operating pressure max. [bar]	8	8	8	8	8	8
Nominal operating pressure [bar]	6	6	6	6	6	6
Operating temperature min. [°C]	+5	+5	+5	+5	+5	+5
Operating temperature max. [°C]	+80	+80	+80	+80	+80	+80
Air volume per cycle [cm³]	22	48	48	22	48	48
Certifications	LABS / REACH / RoHS	LABS / REACH / RoHS	LABS / REACH / RoHS	LABS / REACH / RoHS	LABS / REACH / RoHS	LABS / REACH / RoHS
Protection to IEC 60529	IP40	IP40	IP40	IP40	IP40	IP40
Weight [kg]	0.49	0.64	0.68	0.53	0.65	0.68

NC / NO / SC / SO

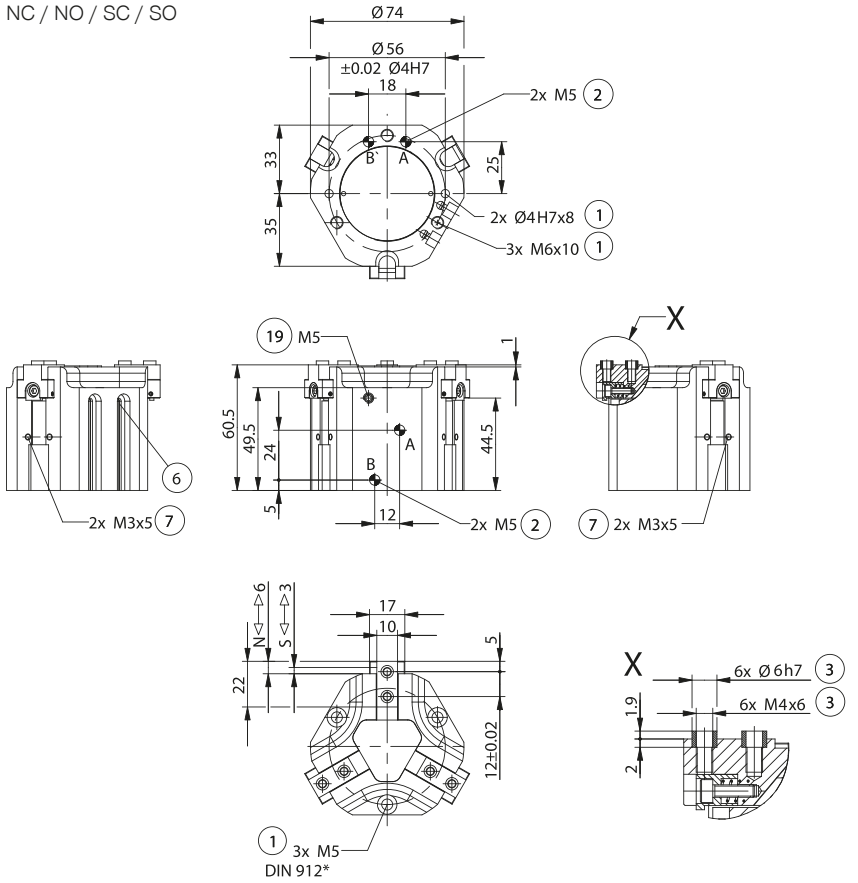

1 Gripper attachment
2 Energy supply
3 Fixing for gripper finger
6 Integrated slot for magnetic field sensor
7 Fixing for mounting block
19 Air purge connection option
38 Adapter
39 Gripper
A Air connection (close)
B Air connection (open)
A' Air connection, alternative (close)
B' Air connection, alternative (open)

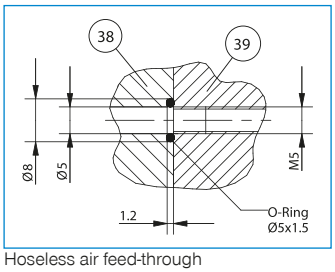

Hoseless air feed-through

N / S

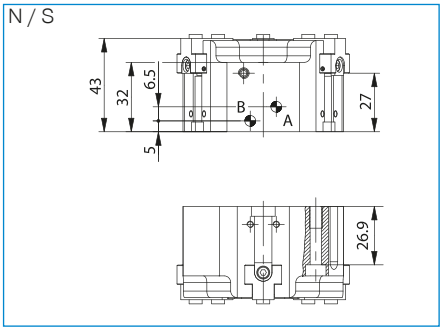

3-JAW CONCENTRIC GRIPPERS
SERIES GD300 FUNCTIONAL DESCRIPTION

GRIPPING COMPONENTS

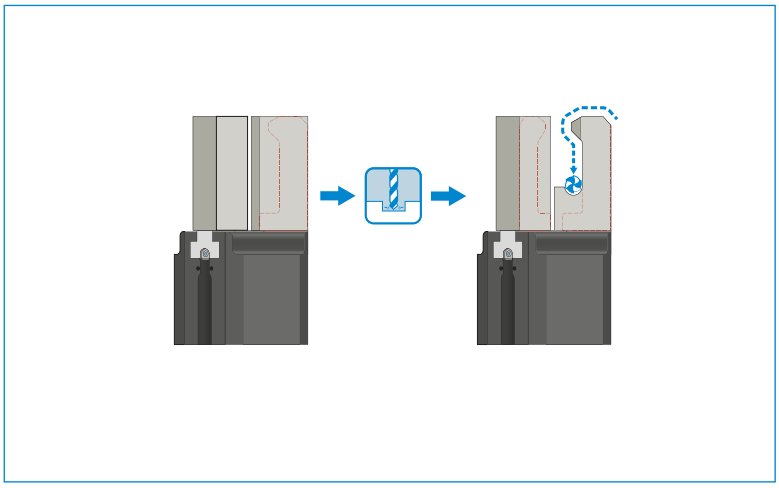

Universal jaws – UB300
When the gripper fingers are open, the pressure piece is used for spring-supported positioning of the workpiece against a limit stop. This greatly reduces the loads on the gripper that arise during joining.

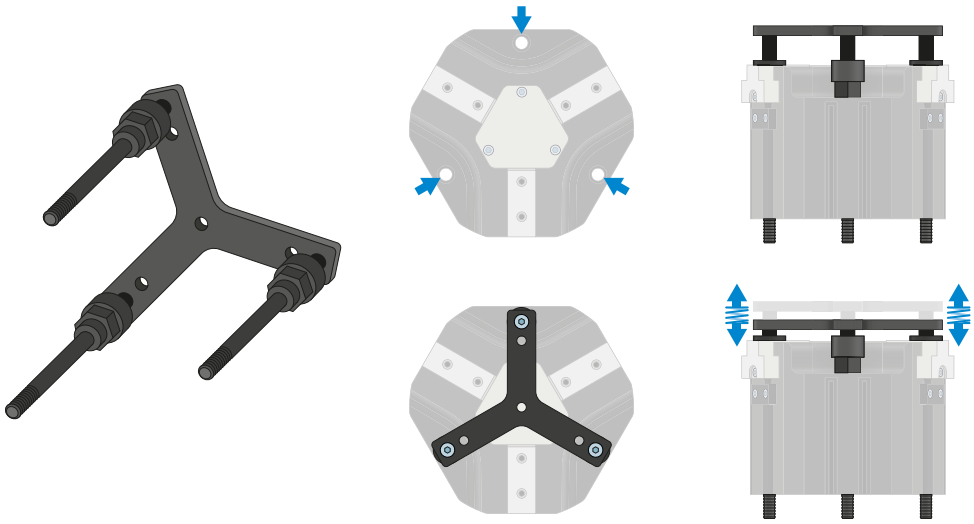

Pressure piece – ADS300
When the gripper fingers are open, the pressure piece is used for spring-supported positioning of the workpiece against a limit stop. This greatly reduces the loads on the gripper that arise during joining.

ENERGY SUPPLY

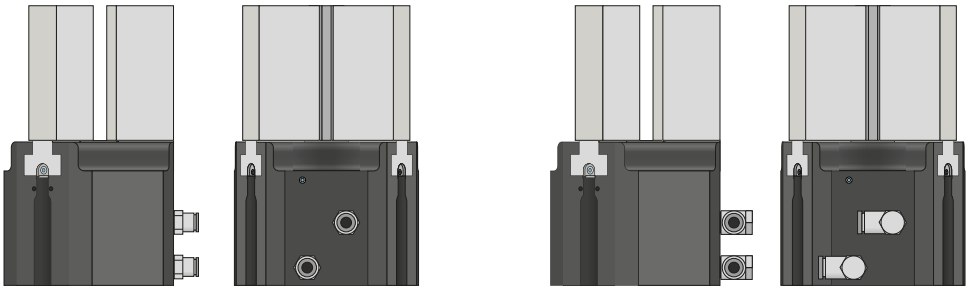

Pneumatic threaded connections

Available in straight and angled design. Can be chosen freely depending on the space conditions or installation situation.

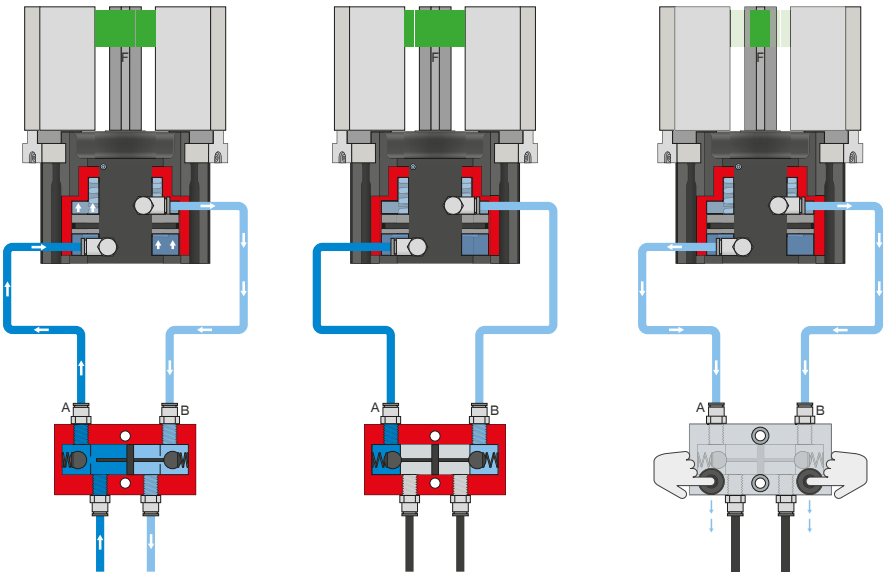

Pressure safety valve – DSV

Ensures safe retention of force and position if the system pressure drops

The integrated double check valve, which can be unlocked, retains the system pressure of the gripper in case of EMERGENCY STOP. To ensure the function, the valve must be installed as close to the gripper's air connection as possible. In variant E, two pushbuttons are installed that allow for controlled bleeding of the gripper.

SENSORS

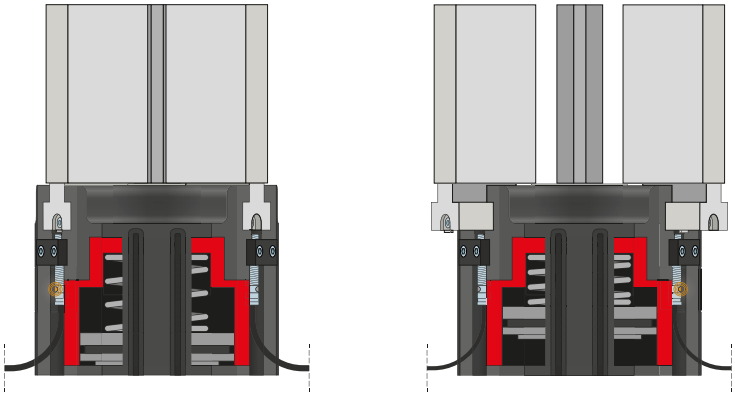

Inductive sensors – NJ

The sensor is inserted into the mounting block as far as it will go and secured. Tuning to the desired position then takes place by adjusting the cam switch. The sensors are available in versions with 5 m cables with exposed leads and 0,3 m cable with male connector, as well as with direct male connector orientation.

SENSORS

MFS02

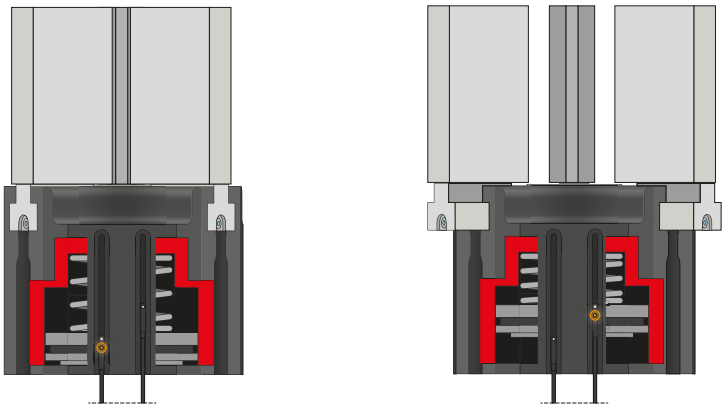

MFS01

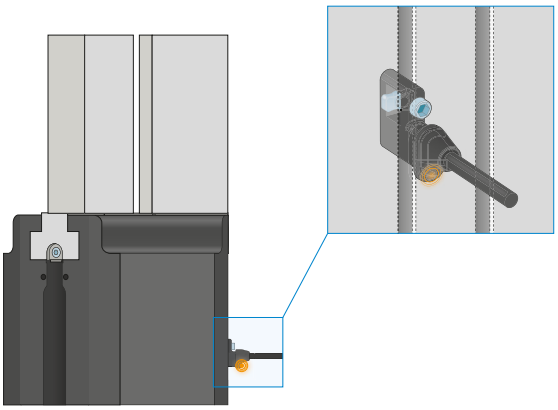

1-point magnetic field sensors – MFS

For non-contact sensing of the piston position

These sensors are installed in the C-groove of the gripper and detect the magnet attached to the piston of the gripper. To ensure use in a wide variety of space conditions, the sensors are available in two variants. While the horizontal MFS02, with straight cable outlet, disappears into the C-groove of the gripper almost completely, the vertical MFS01 is taller, but has a cable outlet that is offset at an angle of 90°. The variants are available in versions with 5 m cables with exposed leads and 0,3 m cable with connector.

CONNECTIONS / OTHER

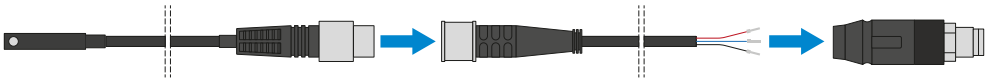

Plug-in connectors

For extending and fabricating the connection lines

Cables with a length of 10 m with exposed leads are available. Depending on the specific needs, the cables can be shortened or fabricated with connectors in sizes M12. A 5 m long cable with male connector / female connector is available for the IO-Link connection.

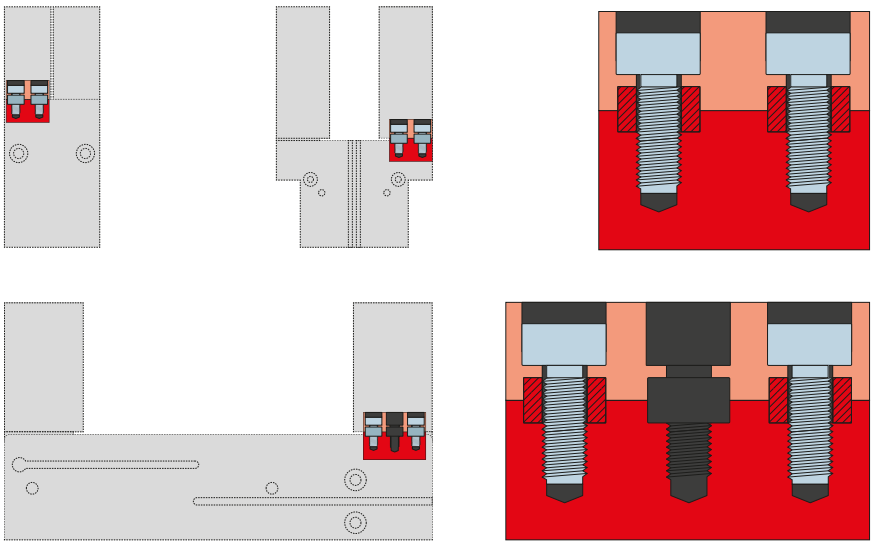

Centering sleeves

For defined position measurement of the gripper fingers

The centering sleeves are inserted into the fits of the gripper jaws to define the position of the gripper fingers. The centering sleeves are comparable to a pin connection.