2-JAW PARALLEL GRIPPERS WITH LONG STROKE
SERIES GEH6000IL

▶ PRODUCT ADVANTAGES

IO-Link

GERMAN DESIGN AWARD WINNER 2019

reddot design award winner 2018

"Highest performance"

- **5 million maintenance-free cycles**
- **Integrated sensing via IO-Link**
- **Servo drive with integrated controller**

  Brushless drive technology, position, speed and force control guarantee the highest amount of functionality
- **IO-Link on board**

  In addition to the unshielded single-cable solution, the future-proof, hot-pluggable activation provides you with a wide variety of travel profiles for easy implementation into your control system
- **Gentle yet powerful**

  Power version -03 for handling heavy workpieces with mechanical self-locking and version -31 for gently gripping of delicate parts

▶ SERIES CHARACTERISTICS

Installation size	Version	
GEH60XXIL	-03	-31
Powerful	●	
Gentle		●
Gripping force adjustable	●	●
High movement speed		●
Integrated sensing	●	●
Positionable	●	●
IO-Link	●	●
Self locking mechanism	●	
5 million maintenance-free cycles (max.)	●	●
Cleanroom-certified	●	●
IP54	●	●

▶ BENEFITS IN DETAIL

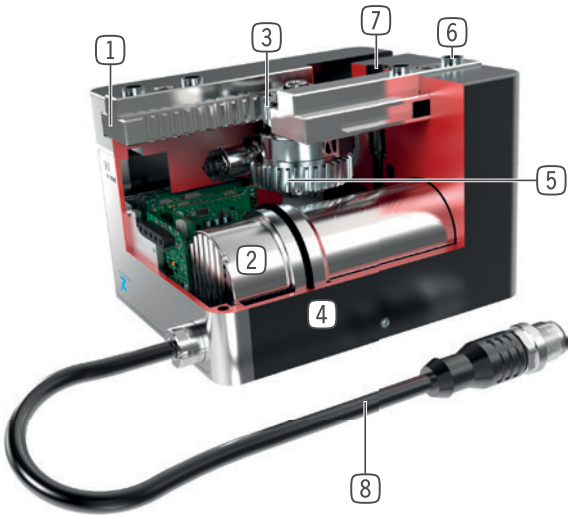

1 **Precise T-Slot guide**
- high forces and moments capacity

2 **Drive**
- Brushless DC servomotor

3 **Rack and pinion gear**
- synchronized the movement of the gripper jaws
- high force transfer

4 **Robust, lightweight housing**
- Hard-coated aluminum alloy

5 **Helical worm gear**
- self locking mechanism in case of power drop (only version -03)

6 **Removable centering sleeves**
- quick and economical positioning of the gripper fingers

7 **Mounting and positioning**
- mounting possible from several sides for versatile positioning

8 **Energy supply**
- standardized connector

▶ TECHNICAL DATA

Installation size	Stroke per jaw, adjustable mm	Gripping force [N]	Weight [kg]	IP class
GEH6000IL	40 - 60	10 - 1000	0,74 - 0,81	IP54
GEH6100IL	40 - 80	150 - 1800	1,9 - 2,6	IP54

▶ FURTHER INFORMATION IS AVAILABLE ONLINE

All information just a click away at: www.zimmer-group.com. Find data, illustrations, 3D models and operating instructions for your installation size using the order number for your desired product. Quick, clear and always up-to-date.

2-JAW PARALLEL GRIPPERS WITH LONG STROKE
INSTALLATION SIZE GEH6040IL

▶ PRODUCT SPECIFICATIONS

IO-Link

▶ Gripping force diagram

GEH6040IL-03-B

Shows the arithmetic total of the individual forces that occur on the gripper fingers, depending on the gripper finger length and the set gripping force

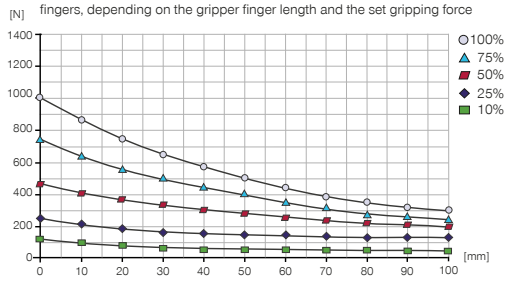

▶ Forces and moments

Displays static forces and moments that can also have an effect, besides the gripping force.

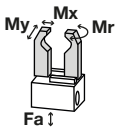

Mr [Nm]	25
Mx [Nm]	25
My [Nm]	25
Fa [N]	500

▶ Gripping force diagram

GEH6040IL-31-B

Shows the arithmetic total of the individual forces that occur on the gripper fingers, depending on the gripper finger length and the set gripping force

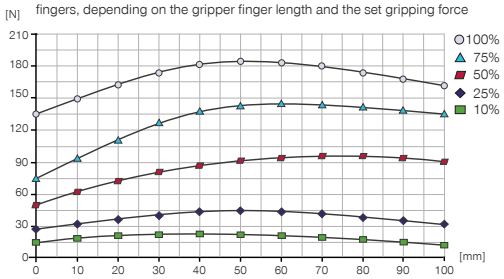

▶ INCLUDED IN DELIVERY

4 [piece]
Centering Disc
DST40400

▶ YOU CAN FIND RECOMMENDED ACCESSORIES ON THE FOLLOWING PAGES

Order no.	► Technical data GEH6040IL-03-B	GEH6040IL-03-B-UL	GEH6040IL-31-B	GEH6040IL-31-B-UL
Control	IO-Link	IO-Link	IO-Link	IO-Link
Drive	BLDC motor	BLDC motor	BLDC motor	BLDC motor
Stroke per jaw, adjustable [mm]	40	40	40	40
Nominal gripping force [N]	1000	1000	180	180
Gripping force min. [N]	100	100	10	10
Current consumption max. [A]	5	5	2	2
Self locking mechanism	mechanical	mechanical	-	
Dead weight of mounted gripper finger max. [kg]	0.3	0.3	0.3	0.3
Length of the gripper fingers max. [mm]	100	100	100	100
Minimum positioning path per jaw [mm]	3	3	0	0
Positioning speed per jaw max. [mm/s]	60	60	120	120
Repetition accuracy +/- [mm]	0.02	0.02	0.02	0.02
Operating temperature [°C]	5 ... +50	5 ... +50	5 ... +50	5 ... +50
Clean room applications according to DIN EN ISO 14644-1	4	4	4	4
Certifications	CE / UKCA / LABS / REACH / RoHS	UL / CE / UKCA / LABS / REACH / RoHS	CE / UKCA / LABS / REACH / RoHS	UL / CE / UKCA / LABS / REACH / RoHS
Protection to IEC 60529	IP54	IP54	IP54	IP54
Weight [kg]	0.74	0.74	0.74	0.74

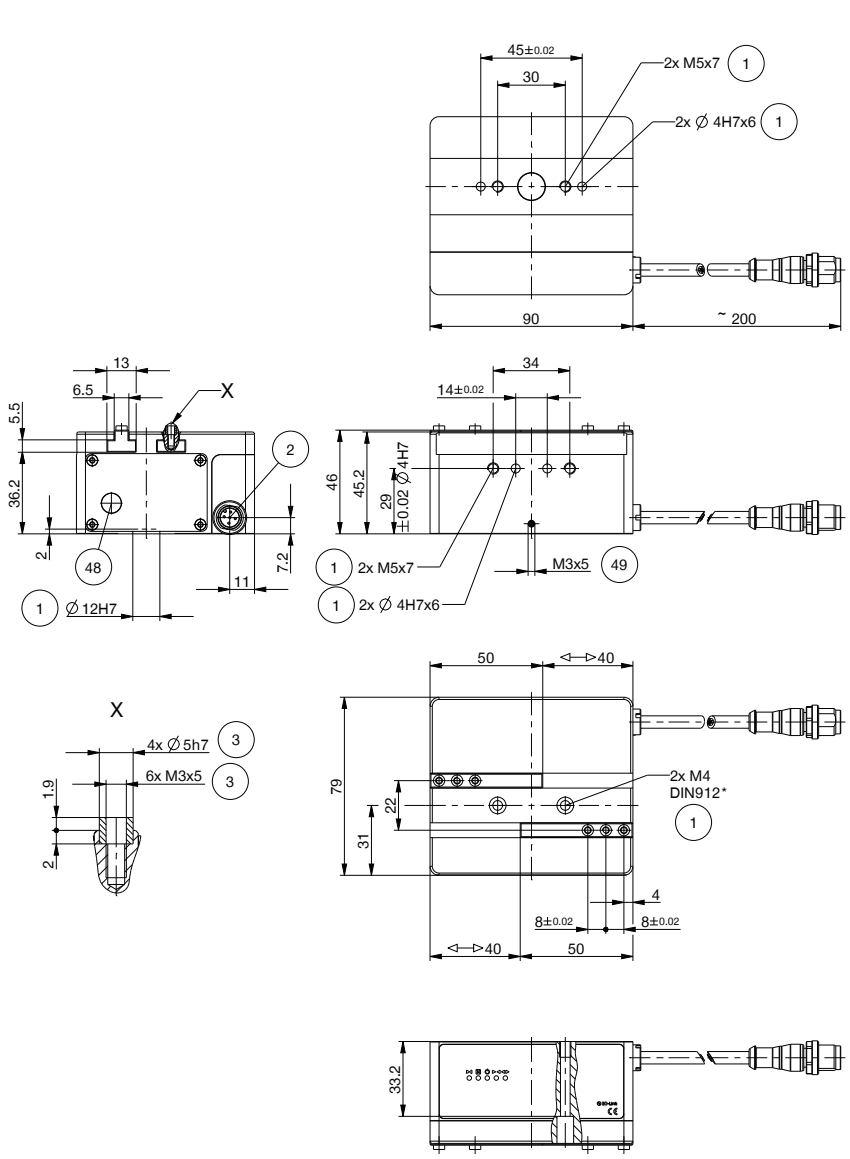

1 Gripper attachment
2 Energy supply (M12, 5-pole)
3 Fixing for gripper finger
48 Emergency release
49 Ground

2-JAW PARALLEL GRIPPERS WITH LONG STROKE
SERIES GEH6000IL - ACCESSORIES

▶ ACCESORIES

▶ RECOMMENDED ACCESSORIES GEH6000IL

Pos.	Order no.		Accessories
1	**UB5006AL**	*	Universal jaw aluminium
1	**UB5006ST**	*	Universal jaw steel
2	**WB5006L**	*	Changeable jaw, loose part set
3	**WB5006F**	*	Changeable jaw, fixed part
4	**EB5006ST**	*	Steel adjustment jaw
4	**EB5006AL**	*	Aluminum adjustment jaw

*in conjunction with pos. 5

Pos.	Order no.	Accessories
5	**APGEH6000**	Adapter plate
6	**UB6000-B**	Universal jaw set aluminium
7	**KAG500IL**	Plug-in connector straight 5 m - plug, female connector M12
8	**B12-Y-5IL**	Y-Plug-in Connector
9	**SCM-C-00-00-A**	Smart Communication Module

▶ RECOMMENDED ACCESSORIES GEH6100IL

Pos.	Order no.		Accessories
1	**UB5008AL**	*	Universal jaw aluminium
1	**UB5008ST**	*	Universal jaw steel
2	**WB5008L**	*	Changeable jaw, loose part set
3	**WB5008F**	*	Changeable jaw, fixed part
4	**EB5008ST**	*	Steel adjustment jaw
4	**EB5008AL**	*	Aluminum adjustment jaw

*in conjunction with pos. 5

Pos.	Order no.	Accessories
5	**APGEH6100**	Adapter plate
6	**UB6100-B**	Universal jaw set aluminium
7	**KAG500IL**	Plug-in connector straight 5 m - plug, female connector M12
8	**B12-Y-5IL**	Y-Plug-in Connector
9	**SCM-C-00-00-A**	Smart Communication Module

2-JAW PARALLEL GRIPPERS WITH LONG STROKE
SERIES GEH6000IL FUNCTIONAL DESCRIPTION

GRIPPING COMPONENTS

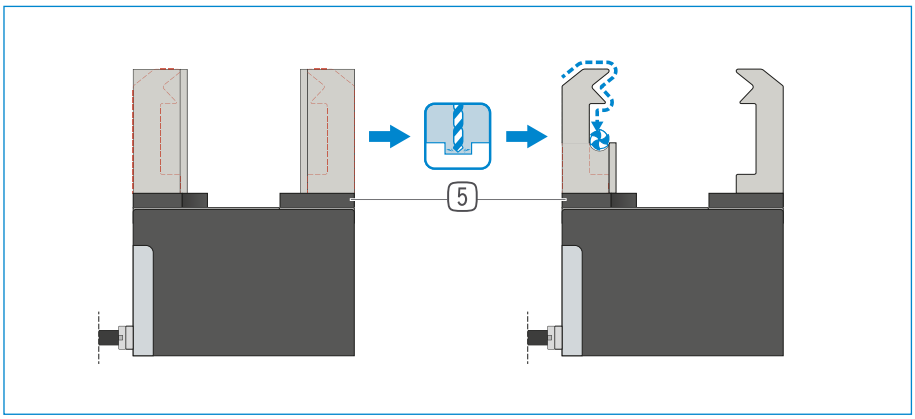

Universal jaws – UB5000

Can be used immediately or for individual reprocessing

The gripper blanks are available in aluminum (AL) and steel (ST) versions and are installed directly on the gripper using the screws in the scope of delivery. The fits for the centering sleeves are already in place for this purpose. One universal jaw is required for each gripper jaw.

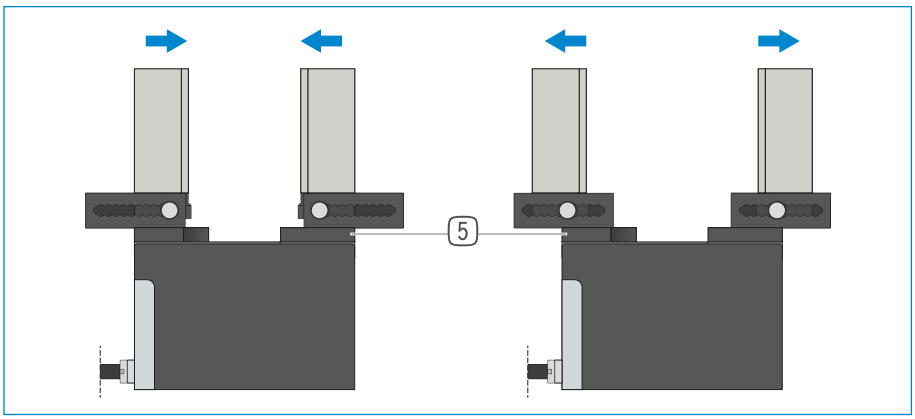

Adjustment jaws – EB5000

For tool-free adaptation of the gripper range

By manually activating the locking mechanism, which is pre-tensioned by a spring, the adjustment jaw can be moved within a grid of detent notches that has a number scale. Depending on the forces and torques that apply, the adjustment jaws are available in aluminum (AL) and steel (ST) versions. One adjustment jaw is required for each gripper jaw.

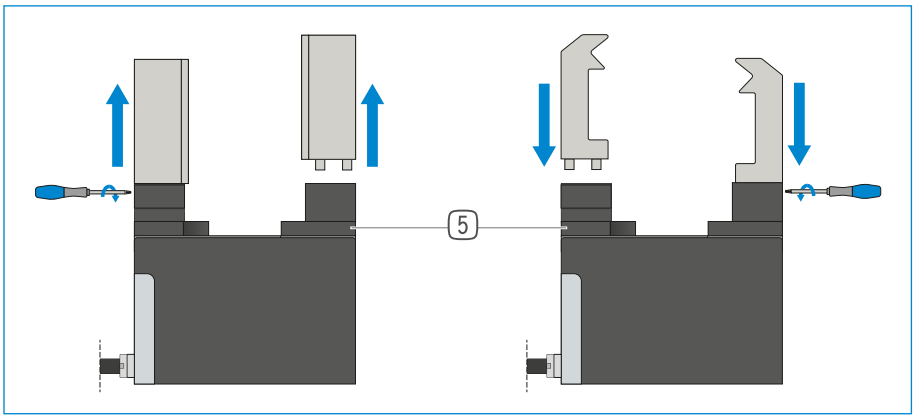

Interchangeable jaws – WB5000

Enable fast change of individual gripper fingers

For each gripper jaw, a fixed part and at least one loose part set is needed, depending on the number of gripper fingers to be changed. Manual locking via the Torx wrench included in the scope of delivery of the fixed part can take place from two sides.

THE GRIPPING COMPONENTS CAN BE COMBINED!

The gripping components listed above can be combined with each other. For connection to the gripper, the adapter plate (5) , which is included in the recommended accessories for the gripper, is required.

GRIPPING COMPONENTS

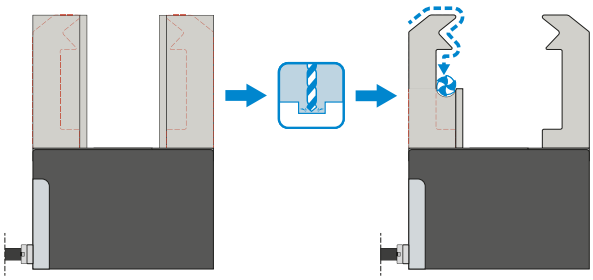

Universal jaws – UB6000-B

Can be used immediately or for individual reprocessing

The gripper blanks are available in an aluminum (AL) version and are installed directly on the gripper using the screws in the scope of delivery. The fits for the centering sleeves are already in place for this purpose. One universal jaw set is required for each gripper.

CONNECTIONS / OTHER

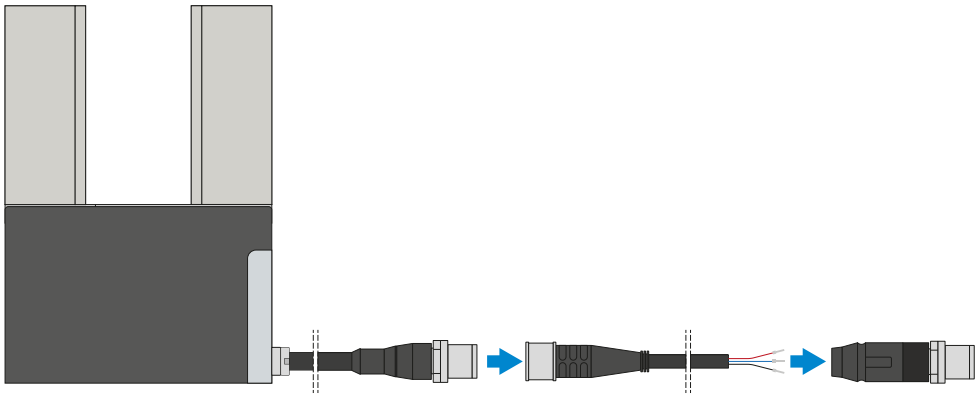

Plug-in connectors

For extending and fabricating the connection lines

Cables with a length of 10 m with exposed leads are available. Depending on the specific needs, the cables can be shortened or fabricated with connectors in sizes M12. A 5 m long cable with male connector / female connector is available for the IO-Link connection.

2-JAW PARALLEL GRIPPERS WITH LONG STROKE
SERIES GEH6000IL FUNCTIONAL DESCRIPTION

CONNECTIONS / OTHER

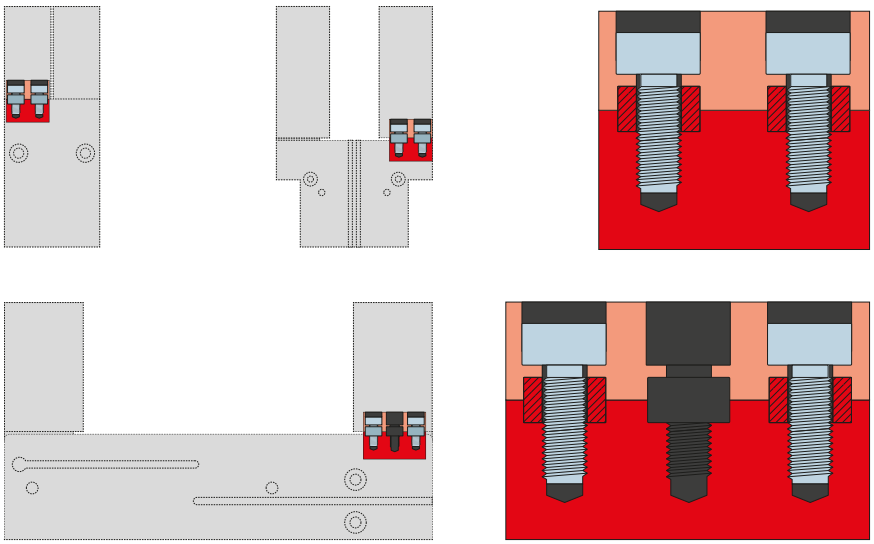

Centering sleeves

For defined position measurement of the gripper fingers

The centering sleeves are inserted into the fits of the gripper jaws to define the position of the gripper fingers. The centering sleeves are comparable to a pin connection.

2-JAW PARALLEL GRIPPERS WITH LONG STROKE
SERIES GEH6000IL GRIPPER FINGER LENGTH

MAXIMUM GRIPPER FINGER LENGTH

The examples show the maximum horizontal (a) and vertical (b) gripper finger length for a GEH6060IL-03-B, illustrated by the blue area. The approach is identical for all other grippers of this series. The projection (a) is determined by multiplying the max. length of the gripper fingers (b) by 0.8. For the max. length of the gripper fingers, refer to the data sheet of the respective gripper.

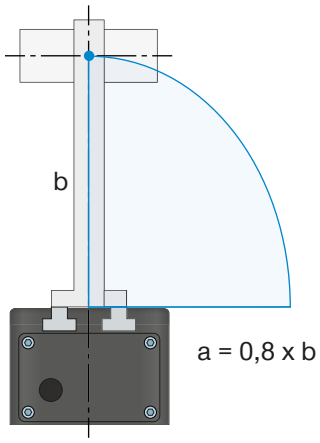

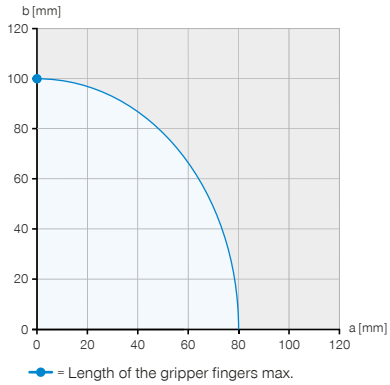

Example 1
Vertical force application point
a = 0 mm
b = 100 mm

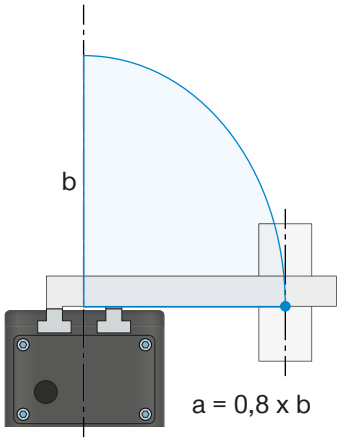

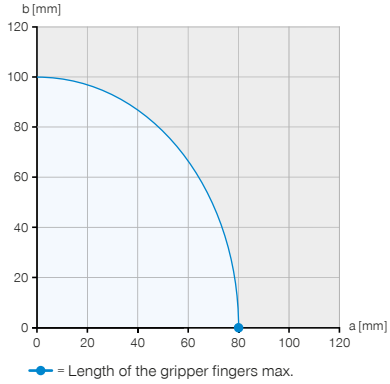

Example 2
Horizontal force application point
a = 80 mm
b = 0 mm

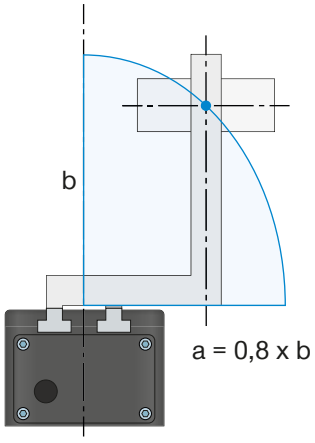

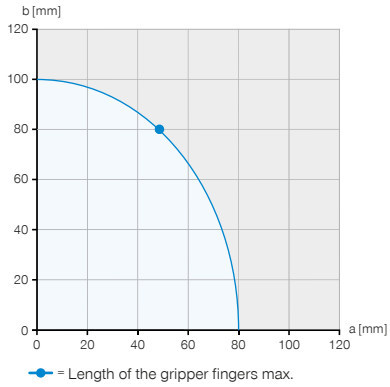

Example 3
Maximum permissible projection
a = 48 mm
b = 80 mm

GRIPPING FORCE AS A FUNCTION OF GRIPPER FINGER LENGTH

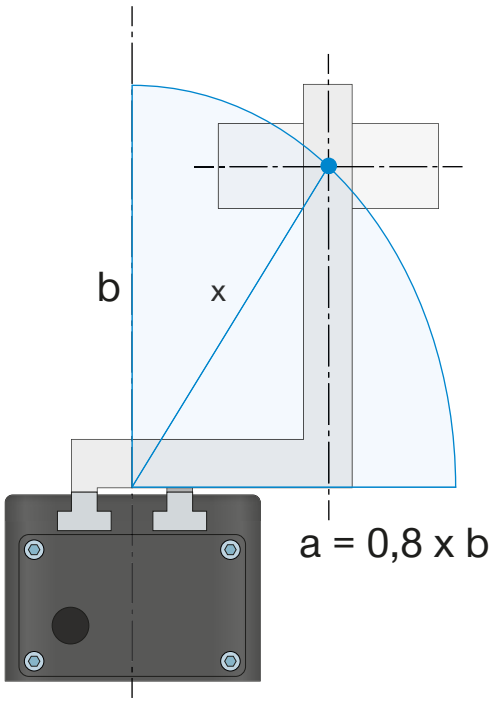

Gripping force diagram

Shows the arithmetic total of the individual forces that occur on the gripper fingers, depending on the gripper finger length and the set gripping force

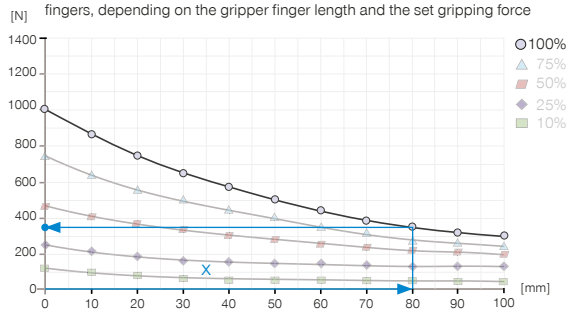

Example 4

Resulting gripper finger length for determining the gripping force

a = 55 mm

b = 58 mm

$$x = \sqrt{55^2 + 58^2} = 80 \Rightarrow 350\ N$$

The specified maximum gripper jaw length in the gripper technical data refers to a vertical (b) alignment of the gripper jaws. With a horizontal (a) overhang, the maximum gripper jaw length is reduced accordingly. The table shows the maximum gripper jaw lengths of the individual sizes.

TECHNICAL DATA

Installation size	Dead weight of mounted gripper finger max. [kg]	Length of the gripper fingers max. vertical (b) [mm]	Length of the gripper fingers max. horizontal (a) [mm]
GEH6000IL	0.3	100	80
GEH6100IL	1	160	130

2-JAW PARALLEL GRIPPERS WITH LONG STROKE
SERIES GEH6000IL GRIPPER FINGER WEIGHT

DEAD WEIGHT OF MOUNTED GRIPPER FINGER

The 6000 gripper series is equipped with a T-slot guide. For the gripper finger design, we take two different cases into account.

1. Static

The workpiece is gripped or gripper without workpiece and the opening or closing stroke of the gripper is not carried out. This is where the schematic diagram of the forces and torques included in the data sheet becomes important.

Example

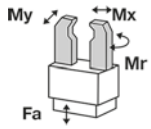

Mr [Nm]	70
Mx [Nm]	100
My [Nm]	60
Fa [N]	1500

2. Load on the guide when opening and closing the gripper

In the gripping direction, Mx, high torques can be transferred by the long T-slot guides. The shorter guide ratio in the My direction results in limitations with respect to the gripper finger lengths and their weights. The effect of the resulting torque is that the gripper jaw gets twisted in the guide when it is overloaded and runs along the edge. In the guides, increased wear is to be expected as a result of this line load. This may also lead to chatter during the movement and, in extreme cases, to the gripper getting jammed. As a countermeasure, a maximum gripper finger weight and length have been recorded in the data sheet. The maximum permitted torque that is allowed to act upon the guide when opening and closing the gripper is calculated using the specified maximum gripper finger length and the maximum gripper finger weight.

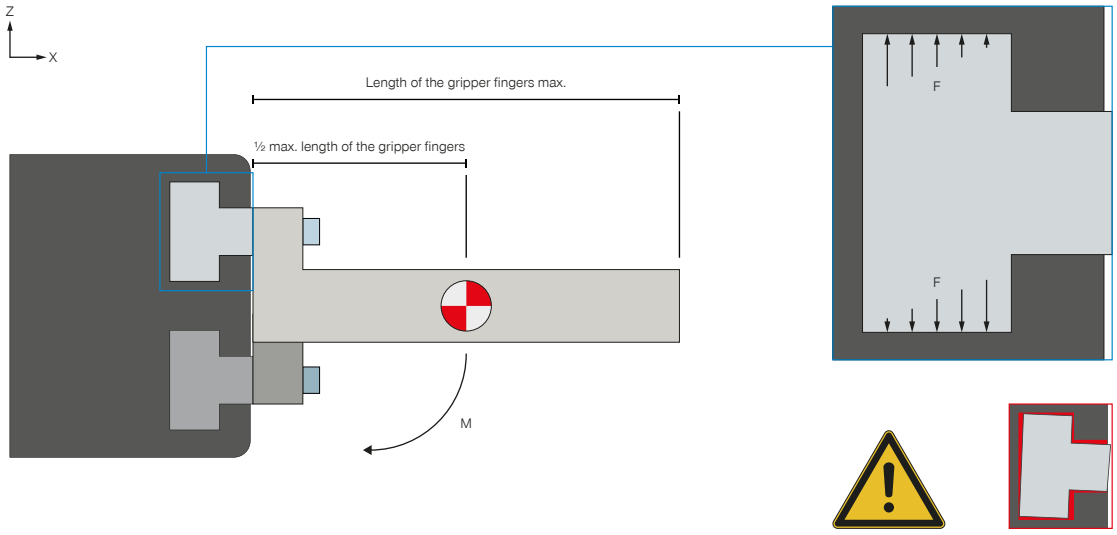

Mmax= ½ max. length of the gripper fingers * max. dead weight, mounted gripper finger * g

Horizontal alignment

To calculate the torque, the center of force is placed at the halfway point of the maximum gripper finger length and multiplied by the maximum gripper finger weight.

DEAD WEIGHT OF MOUNTED GRIPPER FINGER

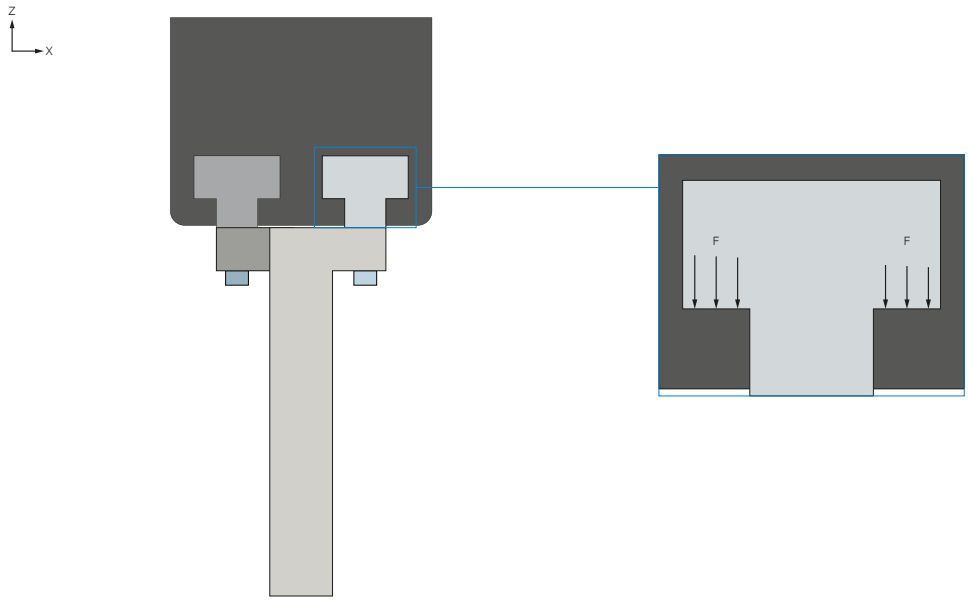

Vertical alignment

If the gripper fingers are aligned vertically during the gripping process, the gripper finger weight is negligible. The maximum permitted torques are typically not reached in this gripping situation. In this case, an overload can only be caused by designs in which the gripper fingers jut out a great deal.

SECURED CONFIGURATION EXAMPLES
GEH6000IL SERIES

► GEH6000IL (IO-LINK) WIRING TO CONTROL CABINET (BECKHOFF)

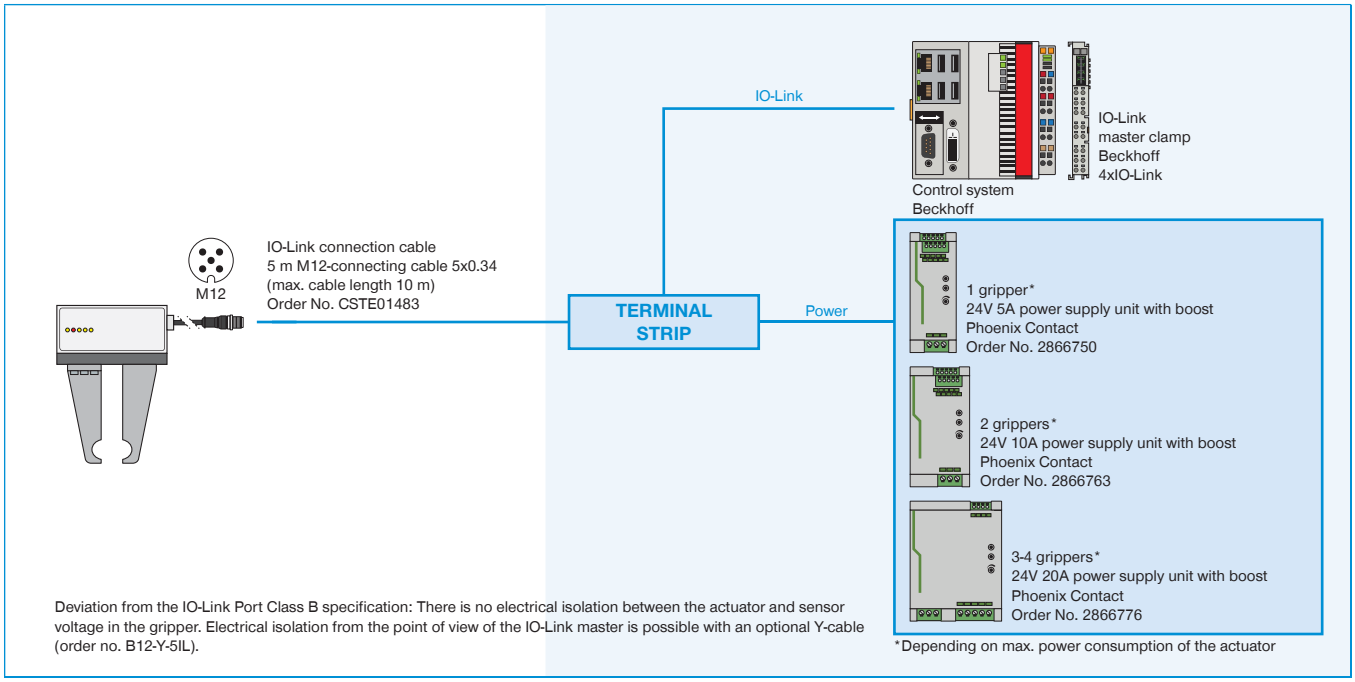

► GEH6000IL (IO-LINK) WIRING TO CONTROL CABINET (SIEMENS)

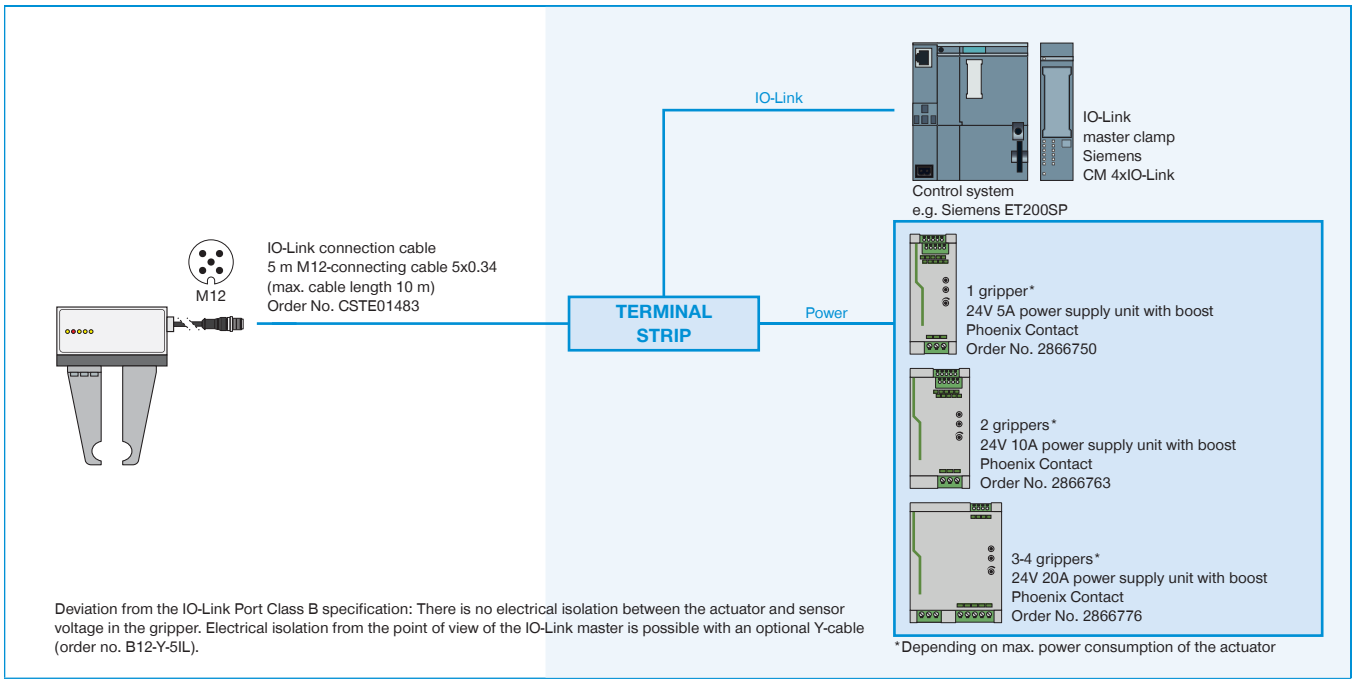

▶ GEH6000IL-03-B WIRING TO IO-LINK MASTER IP67 (BECKHOFF)

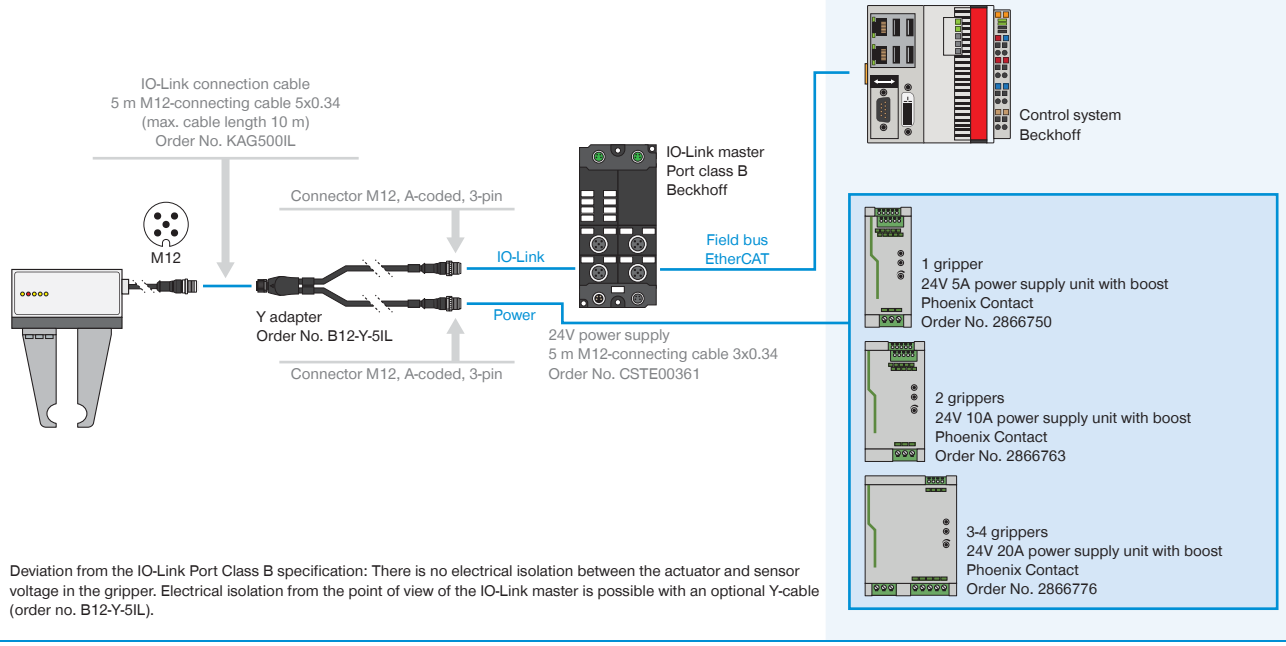

Deviation from the IO-Link Port Class B specification: There is no electrical isolation between the actuator and sensor voltage in the gripper. Electrical isolation from the point of view of the IO-Link master is possible with an optional Y-cable (order no. B12-Y-5IL).

▶ GEH6000IL-31-B WIRING TO IO-LINK MASTER IP67 (BECKHOFF) WITH 1-2 GRIPPERS

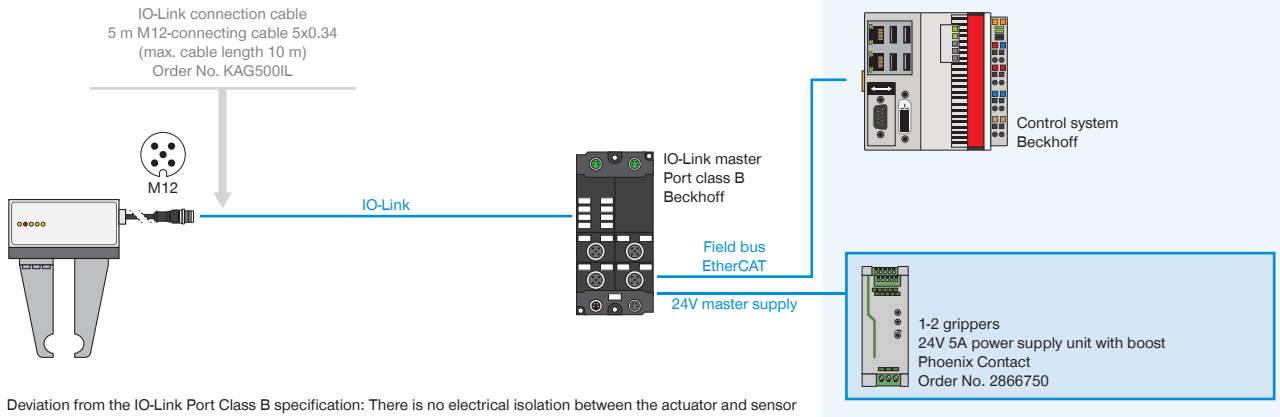

Deviation from the IO-Link Port Class B specification: There is no electrical isolation between the actuator and sensor voltage in the gripper. Electrical isolation from the point of view of the IO-Link master is possible with an optional Y-cable (order no. B12-Y-5IL).

▶ GEH6000IL-31-B WIRING TO IO-LINK MASTER IP67 (BECKHOFF) WITH 3-4 GRIPPERS

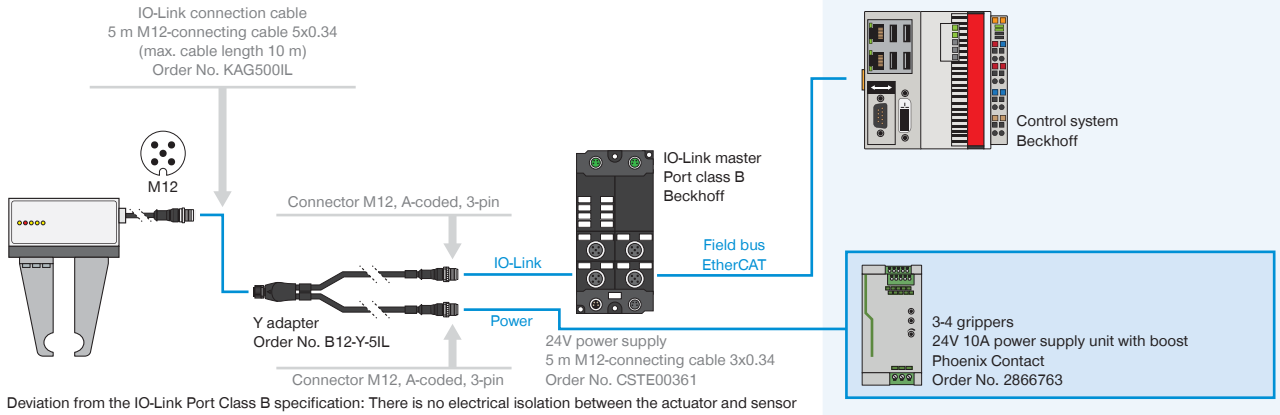

Deviation from the IO-Link Port Class B specification: There is no electrical isolation between the actuator and sensor voltage in the gripper. Electrical isolation from the point of view of the IO-Link master is possible with an optional Y-cable (order no. B12-Y-5IL).

▶ GEH6000IL-03-B WIRING TO IO-LINK MASTER IP67 (BECKHOFF)

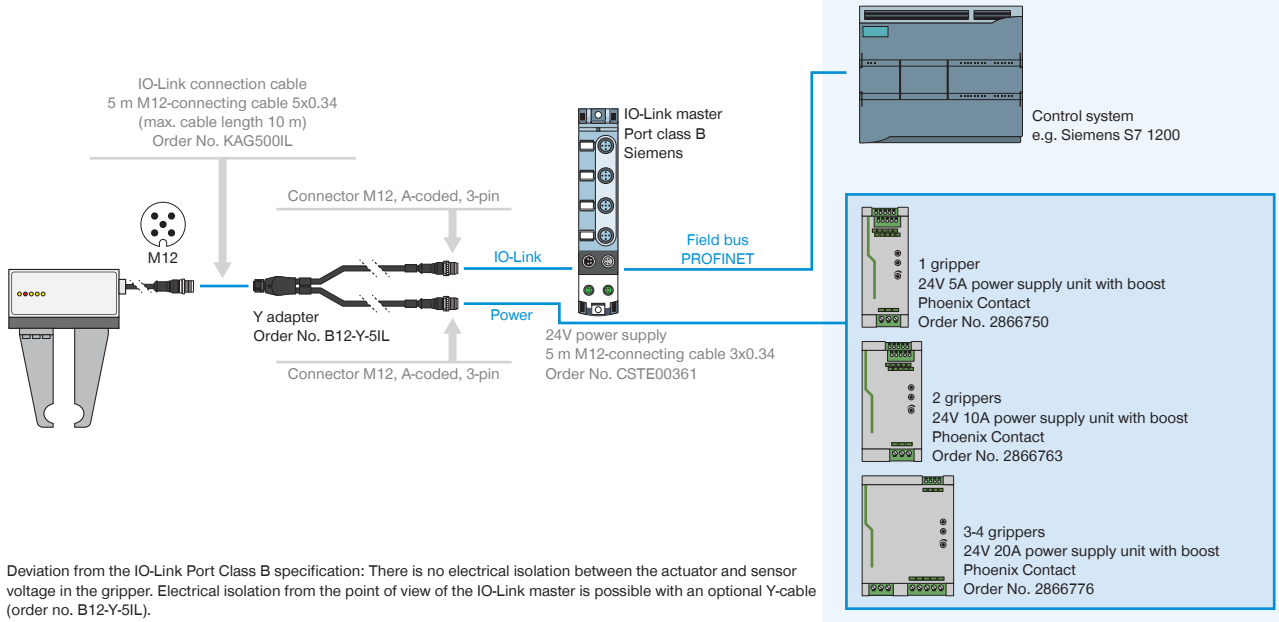

Deviation from the IO-Link Port Class B specification: There is no electrical isolation between the actuator and sensor voltage in the gripper. Electrical isolation from the point of view of the IO-Link master is possible with an optional Y-cable (order no. B12-Y-5IL).

▶ GEH6000IL-31-B WIRING TO IO-LINK MASTER IP67 (SIEMENS) WITH 1-2 GRIPPERS

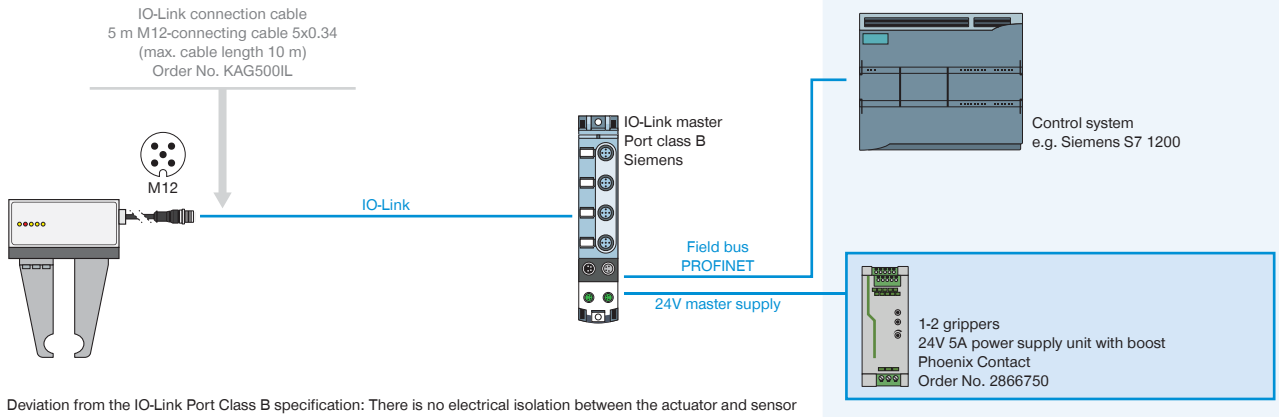

Deviation from the IO-Link Port Class B specification: There is no electrical isolation between the actuator and sensor voltage in the gripper. Electrical isolation from the point of view of the IO-Link master is possible with an optional Y-cable (order no. B12-Y-5IL).

▶ GEH6000IL-31-B WIRING TO IO-LINK MASTER IP67 (SIEMENS) WITH 3-4 GRIPPERS

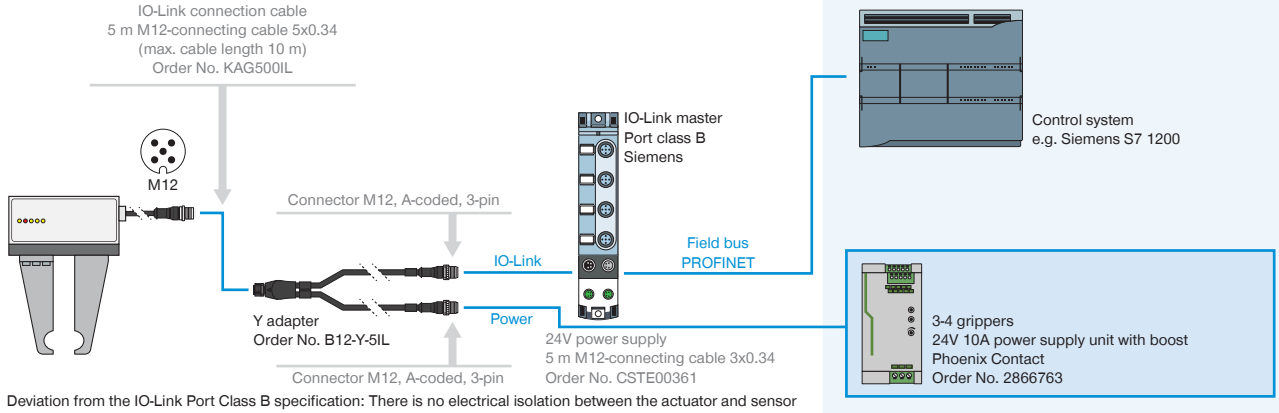

Deviation from the IO-Link Port Class B specification: There is no electrical isolation between the actuator and sensor voltage in the gripper. Electrical isolation from the point of view of the IO-Link master is possible with an optional Y-cable (order no. B12-Y-5IL).

IO-LINK MEETS DIGITAL I/O
SMART COMMUNICATION MODULE

IO-Link meets digital I/O

The Smart Communication Module (SCM) is a master gateway that is suitable for all IO-Link components. With its two channels, the SCM can control two devices and on a functional level, offers the direct implementation of IO-Link to digital I/O. The module thus makes it possible to integrate IO-Link devices into a digital infrastructure and utilize almost the full extended range of functions of the IO-Link device.

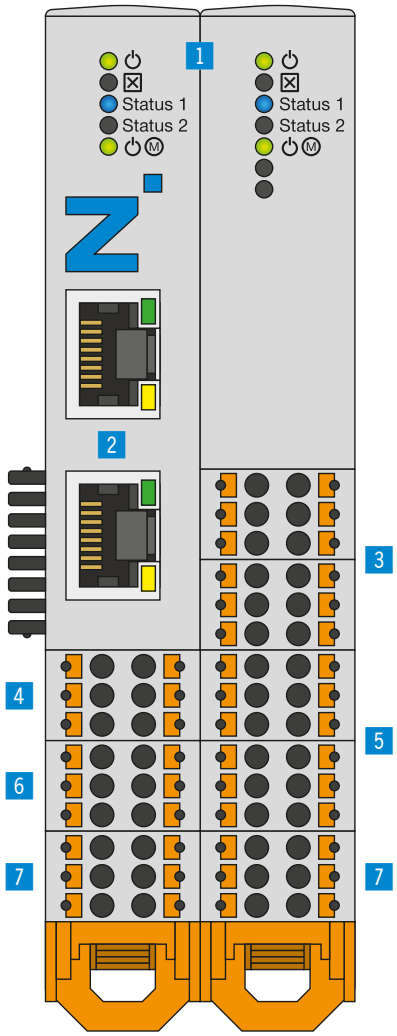

▶ PRODUCT ADVANTAGES

- **Translates IO-Link to digital inputs and outputs (digital I/O) and from digital I/O to IO-Link**
- **Easy control of intelligent IO-Link grippers via 24 V digital I/O**
- **Configuration and training take place using the corresponding intuitive guideZ software**
- **Ready-to-connect cable set for the corresponding controller type**
- **Can be used with one or two grippers depending on the flexibility required**
- **Depending on the required flexibility, up to 15 different workpieces can be used for one gripper. Alternatively, two grippers can be used.**

▶ BENEFITS IN DETAIL

1 **Status**
- Status display of SCM and IO-Link device

2 **Ethernet RJ45**
- Temporary connection for gripper configuration

3 **Digital input**
- Digital inputs for controlling the gripper actuators

4 **IO-Link / Device 1**
- Gripper module 1 connection

5 **Digital output**
- Digital outputs for monitoring the gripper sensors

6 **IO-Link / Device 2**
- Gripper module 2 connection

7 **Power supply**
- Voltage supply SCM and gripper

	▶ Technical Data
Order no.	**SCM-C-00-00-A**
Control	Digital I/O
IO logic	PNP
Number of grippers, max.	2
Number of pins (control system input)	12
Number of pins (control system output)	12
Configuration for interface	Ethernet RJ45
Mounting options	35 mm top-hat rail
Voltage [V]	24
Load supply peak current [A]	10
Logic supply peak current [A]	1
Operating temperature [°C]	5 ... +50
Certifications	CE / UKCA / LABS / REACH / RoHS
Protection to IEC 60529	IP20
Weight [kg]	0.26

TOPOLOGY
CONNECTION

Configuration and operation

Up to two Zimmer IO-Link devices can be connected to one Smart Communication Module. The digital inputs and outputs are wired directly to the robot controller or PLC. Simple digital control enables bidirectional communication. To configure the gripper parameters, a temporary network connection is established to a commercially available PC.

As soon as the parameters have been configured intuitively, this connection is no longer necessary. Next, the handling unit is automatically controlled directly via robot controller or PLC.

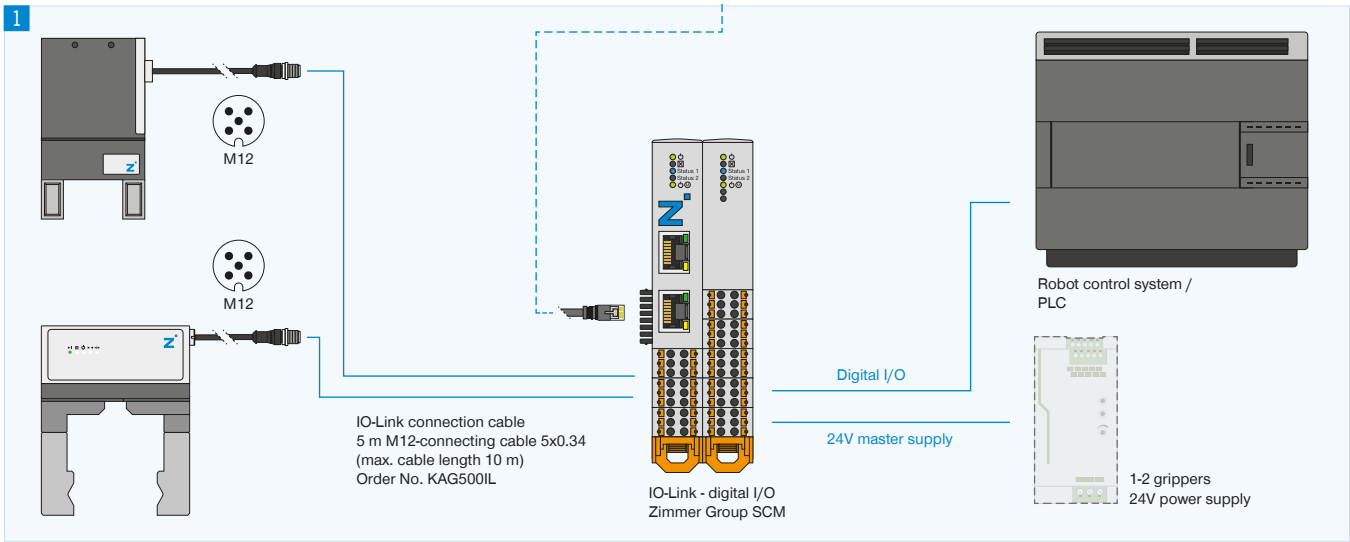

1 Connection

- IO-Link gripper
- Digital I/Os on the robot control system/PLC
- Power supply

2 Configuration

Temporary network connection via PC for use of the guideZ, expertZ and monitorZ software

▶ FURTHER INFORMATION IS AVAILABLE ONLINE

All information just a click away at: www.zimmer-group.com. Find data, illustrations, 3D models and operating instructions for your installation size using the order number for your desired product. Quick, clear and always up-to-date.