2-JAW PARALLEL GRIPPERS
SERIES GEP5000

▶ PRODUCT ADVANTAGES

IO-Link

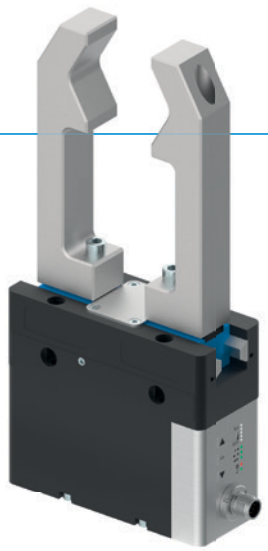

reddot design award winner 2018

"ALL in ONE"

- Approximately the same gripping force as a comparable pneumatic gripper
- Self locking mechanism in case of power drop
- Same connection hole patterns as a comparable pneumatic gripper
- Plug and play – single-cable solution, supports incredibly easy control using I/O signals or IO-Link
- Integrated ACM control module - option of configuring gripping force, travel time and switching points
- Protected from corrosion and sealed in accordance with IP64
- Brushless DC motor – up to 30 million cycles without maintenance

▶ SERIES CHARACTERISTICS

Installation size	Variants	
GEP50XX	IL-00	IO-00
IO-Link	●	
Digital I/O		●
30 million maintenance-free cycles (max.)	●	●
Integrated sensing	●	●
Gripping force adjustable	●	●
Self locking mechanism	●	●
Protected against corrosion	●	●
Purged air	●	●
IP64	●	●

▶ BENEFITS IN DETAIL

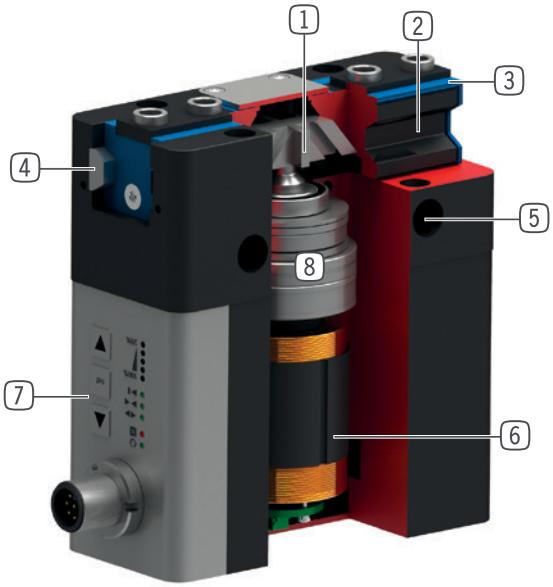

1 **Wedge hook mechanism**
- Supports to absorb high forces and moments
- Synchronized gripper jaw movement

2 **Gripper jaw**
- Gripper fingers mounted using removable centering sleeves
- Lubricated for life via incorporated lubrication slots

3 **Dual lip seal**
- Enables IP64
- Prevents grease from being squeezed out, increasing service life

4 **Steel Linear Guide**
- Steel in steel guide
- Enables use of extremely long gripper fingers

5 **Mounting and positioning**
- Alternatively, on several sides for customized mounting
- Pneumatic and electrical versions identical apart from height

6 **BLDC motor**
- wear-resistant brushless DC motor

7 **Advanced control module**
- Integrated control module with single-cable solution
- Gripping force, travel time and query programmable via the control panel on the housing

8 **Drive train**
- Combination of trapezoidal spindle and gear
- Durable and robust

▶ TECHNICAL DATA

Installation size	Stroke per jaw [mm]	Gripping force [N]	Weight [kg]	IP class
GEP5006	6	540 - 960	0.79	IP64*
GEP5008	8	650 - 1150	1.2	IP64*
GEP5010	10	980 - 1520	1.6	IP64*

*with purged air (max. 0,5 bar)

▶ FURTHER INFORMATION IS AVAILABLE ONLINE

All information just a click away at: www.zimmer-group.com. Find data, illustrations, 3D models and operating instructions for your installation size using the order number for your desired product. Quick, clear and always up-to-date.

2-JAW PARALLEL GRIPPERS
INSTALLATION SIZE GEP5010

▶ PRODUCT SPECIFICATIONS

▶ Gripping force diagram

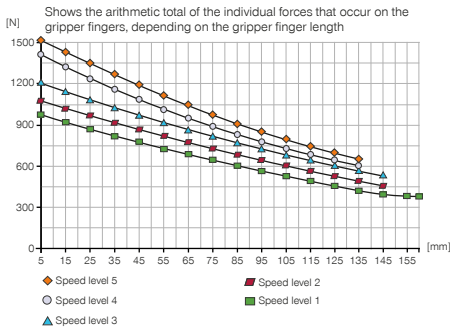

▶ Forces and moments

Displays static forces and moments that can also have an effect, besides the gripping force.

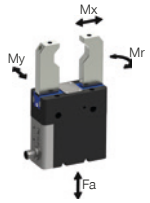

Mr [Nm]	75
Mx [Nm]	125
My [Nm]	95
Fa [N]	2700

▶ TECHNICAL DATA - BASIC VERSION

	▶ Technical data	
Order no.	**GEP5010IL-00-A**	**GEP5010IO-00-A**
Control	IO-Link	I/O
Drive	BLDC motor	BLDC motor
Stroke per jaw [mm]	10	10
Self locking mechanism	mechanical	mechanical
Control time [s]	0.035	0.035
Dead weight of mounted gripper finger max. [kg]	1.3	1.3
Length of the gripper fingers max. [mm]	160	160
Minimum positioning path per jaw [mm]	1.3	
Repetition accuracy +/- [mm]	0.01	0.01
Operating temperature [°C]	5 ... +50	5 ... +50
Voltage [V]	24	24
Current consumption max. [A]	5	5
Certifications	CE / UKCA / LABS / REACH / RoHS	CE / UKCA / LABS / REACH / RoHS
Protection to IEC 60529	IP64*	IP64*
Weight [kg]	1.6	1.6

*with purged air (max. 0,5 bar)

▶ TECHNICAL DATA - MODES

	▶ Technical data - N mode	
Order no.	**GEP5010IL-00-A**	**GEP5010IO-00-A**
Gripping force →|← min. / max. [N]	980 / 1520	980 / 1520
Gripping force |⟷| min. / max. [N]	980 / 1520	980 / 1520
Travel time →|← min. / max. [s]	0,21 / 0,32	0,21 / 0,32
Travel time |⟷| min. / max. [s]	0,21 / 0,32	0,21 / 0,32

	▶ Technical data - NC mode	
Order no.	**GEP5010IL-00-A**	**GEP5010IO-00-A**
Gripping force →|← min. / max. [N]	980 / 1520	980 / 1520
Gripping force |⟷| min. / max. [N]	-	-
Travel time →|← min. / max. [s]	0,21 / 0,32	0,21 / 0,32
Travel time |⟷| min. / max. [s]	0,16	0,16

	▶ Technical data - NO mode	
Order no.	**GEP5010IL-00-A**	**GEP5010IO-00-A**
Gripping force →|← min. / max. [N]	-	-
Gripping force |⟷| min. / max. [N]	980 / 1520	980 / 1520
Travel time →|← min. / max. [s]	0,16	0,16
Travel time |⟷| min. / max. [s]	0,21 / 0,32	0,21 / 0,32

▶ TECHNICAL DRAWINGS

① Gripper attachment
② Energy supply (M12, 8-pole)
③ Fixing for gripper finger
⑲ Air purge connection option
㉟ Attachment option for customer-specific fittings
㊹ Energy supply IO-Link (M12, 5-pole)

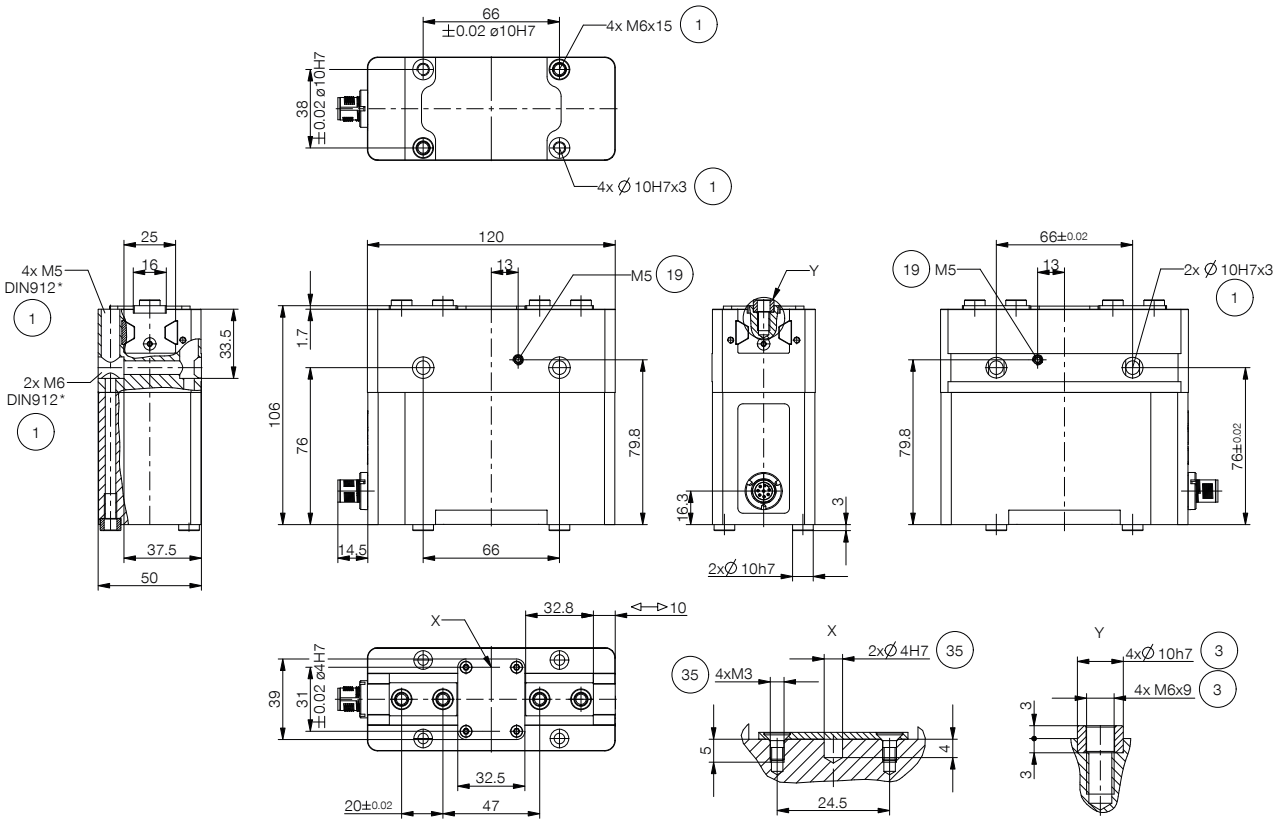

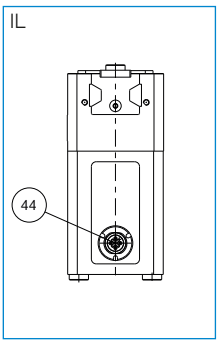

2-JAW PARALLEL GRIPPERS
INSTALLATION SIZE GEP5010

▶ ACCESORIES

▶ INCLUDED IN DELIVERY

6 [piece]
Centering Disc

018187

▶ INFRASTRUCTURE IO-LINK

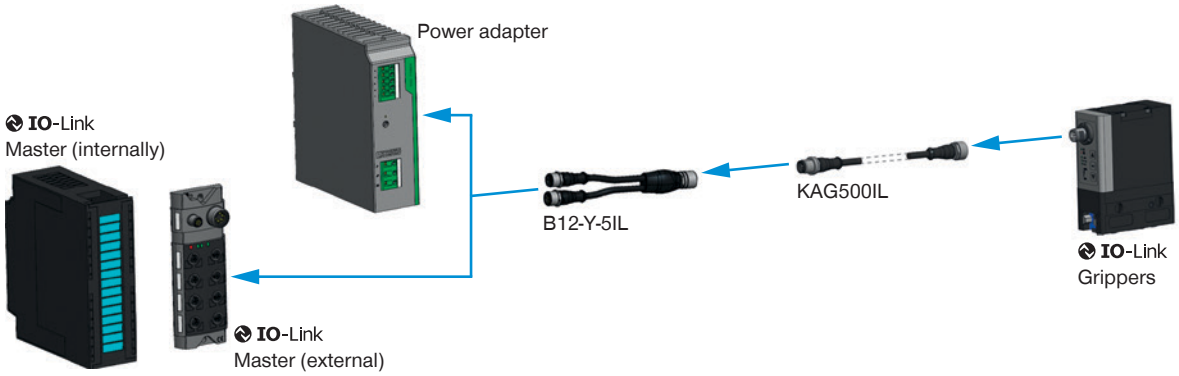

▶ RECOMMENDED ACCESSORIES

GRIPPING COMPONENTS

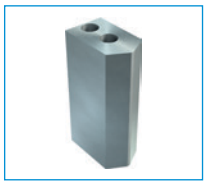

UB5010AL
Universal jaw aluminium

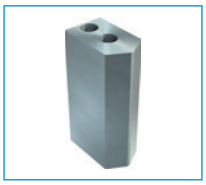

UB5010ST
Universal jaw steel

EB5010AL
Aluminum adjustment jaw

EB5010ST
Steel adjustment jaw

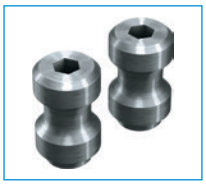

WB5010L
Changeable jaw, loose part set

WB5010F
Changeable jaw, fixed part

▶ RECOMMENDED ACCESSORY GEP5010IL-00-A

CONNECTIONS / OTHER

KAG500IL
Plug-in connector straight 5 m - plug, female connector M12

B12-Y-5IL
Y-Plug-in Connector

SCM-C-00-00-A
Smart Communication Module

▶ RECOMMENDED ACCESSORY GEP5010IO-00-A

CONNECTIONS / OTHER

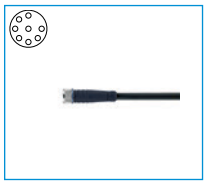

KAG1000B8
Plug-in Connector Straight Cable 10 m - Female M12

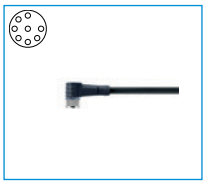

KAW1000B8
Plug-in Connector Angled Cable 10 m - Female M12

2-JAW PARALLEL GRIPPERS
SERIES GEP5000 FUNCTIONAL DESCRIPTION

GRIPPING COMPONENTS

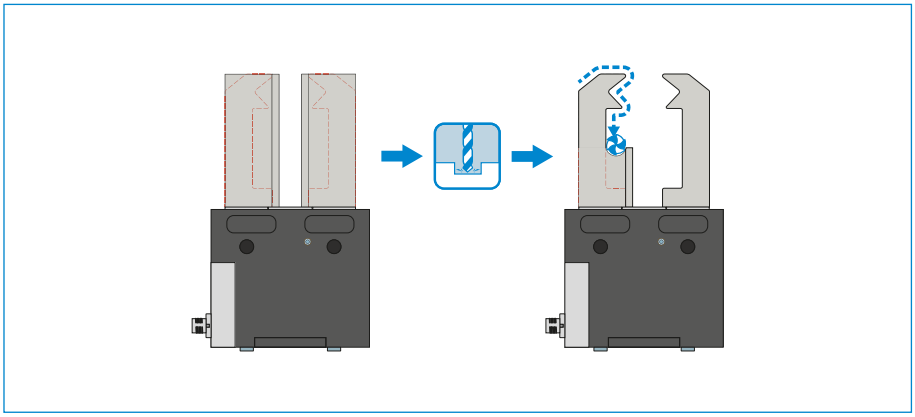

Universal jaws – UB5000

Can be used immediately or for individual reprocessing

The gripper blanks are available in aluminum (AL) and steel (ST) versions and are installed directly on the gripper using the screws in the scope of delivery. The fits for the centering sleeves are already in place for this purpose. One universal jaw is required for each gripper jaw.

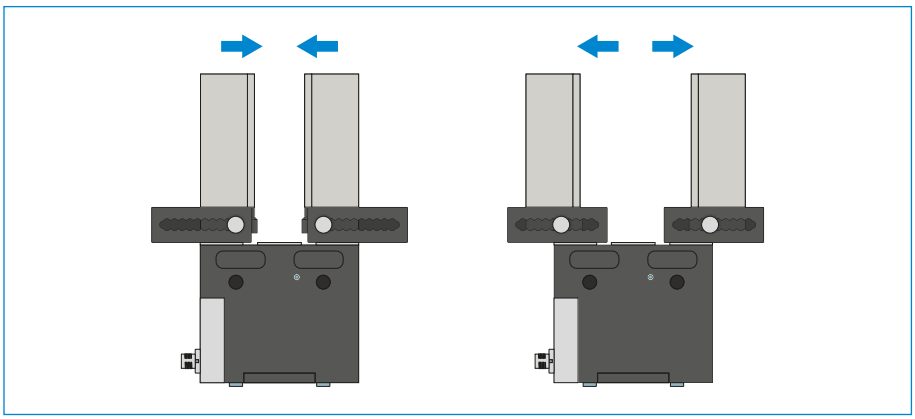

Adjustment jaws – EB5000

For tool-free adaptation of the gripper range

By manually activating the locking mechanism, which is pre-tensioned by a spring, the adjustment jaw can be moved within a grid of detent notches that has a number scale. Depending on the forces and torques that apply, the adjustment jaws are available in aluminum (AL) and steel (ST) versions. One adjustment jaw is required for each gripper jaw.

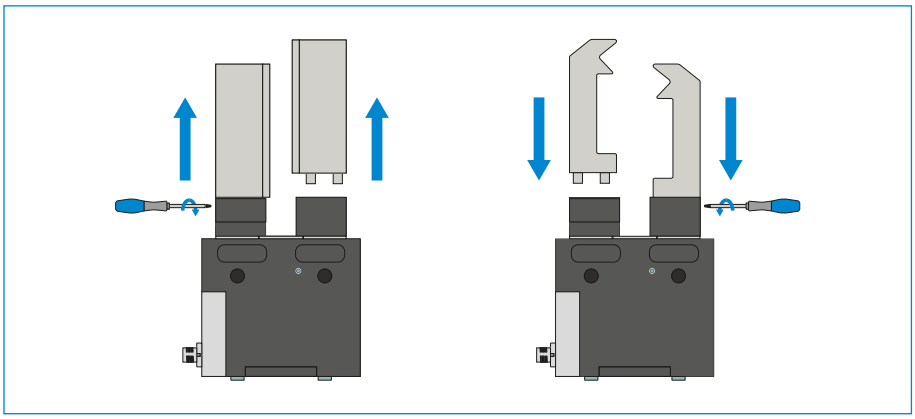

Interchangeable jaws – WB5000

Enable fast change of individual gripper fingers

For each gripper jaw, a fixed part and at least one loose part set is needed, depending on the number of gripper fingers to be changed. Manual locking via the Torx wrench included in the scope of delivery of the fixed part can take place from two sides.

THE GRIPPING COMPONENTS CAN BE COMBINED!

The gripper components listed above can be combined with each other and are compatible with the various series of the 5000 gripper family.

CONNECTIONS / OTHER

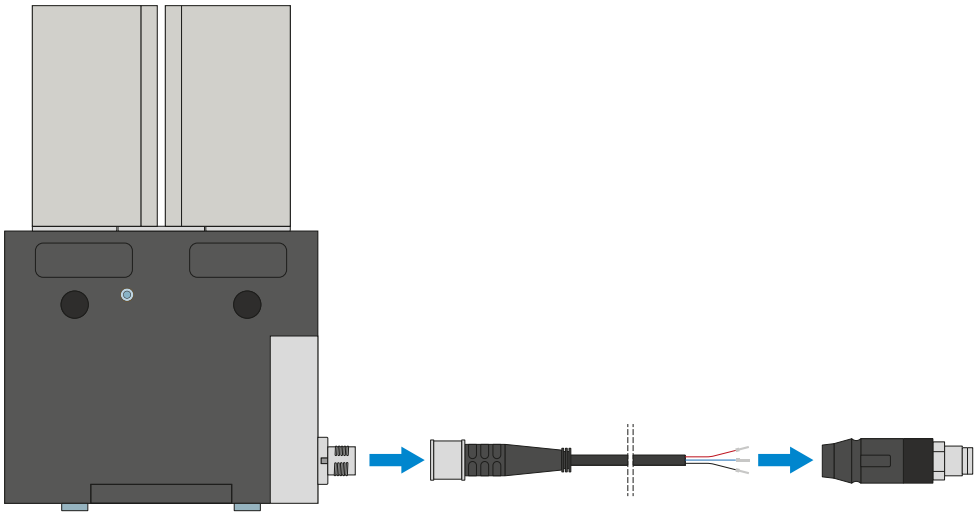

Plug-in connectors

For extending and fabricating the connection lines

Cables with a length of 10 m with exposed leads are available. Depending on the specific needs, the cables can be shortened or fabricated with connectors in sizes M12. A 5 m long cable with male connector / female connector is available for the IO-Link connection.

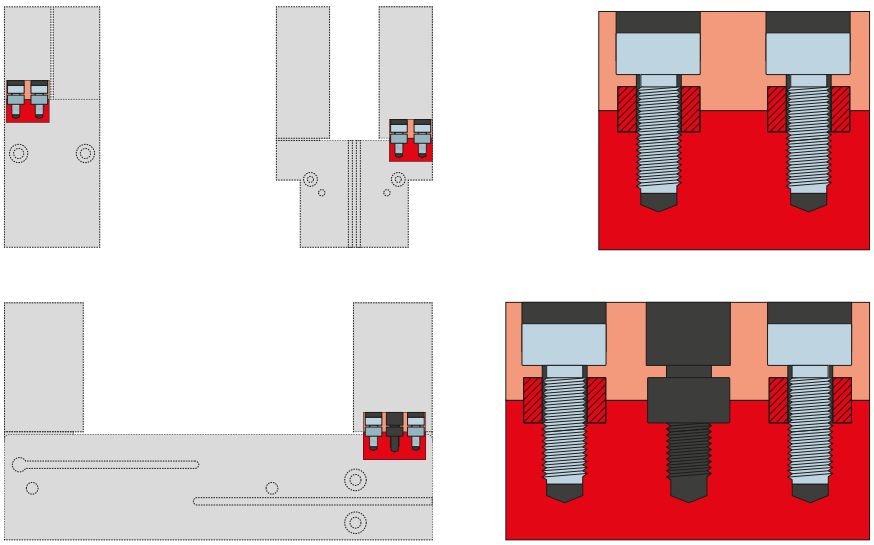

Centering sleeves

For defined position measurement of the gripper fingers

The centering sleeves are inserted into the fits of the gripper jaws to define the position of the gripper fingers. The centering sleeves are comparable to a pin connection.

SECURED CONFIGURATION EXAMPLES
GEP5000 / GED5000 SERIES

▶ GPP5000IL / GPD5000IL (IO-LINK) WIRING TO CONTROL CABINET (BECKHOFF)

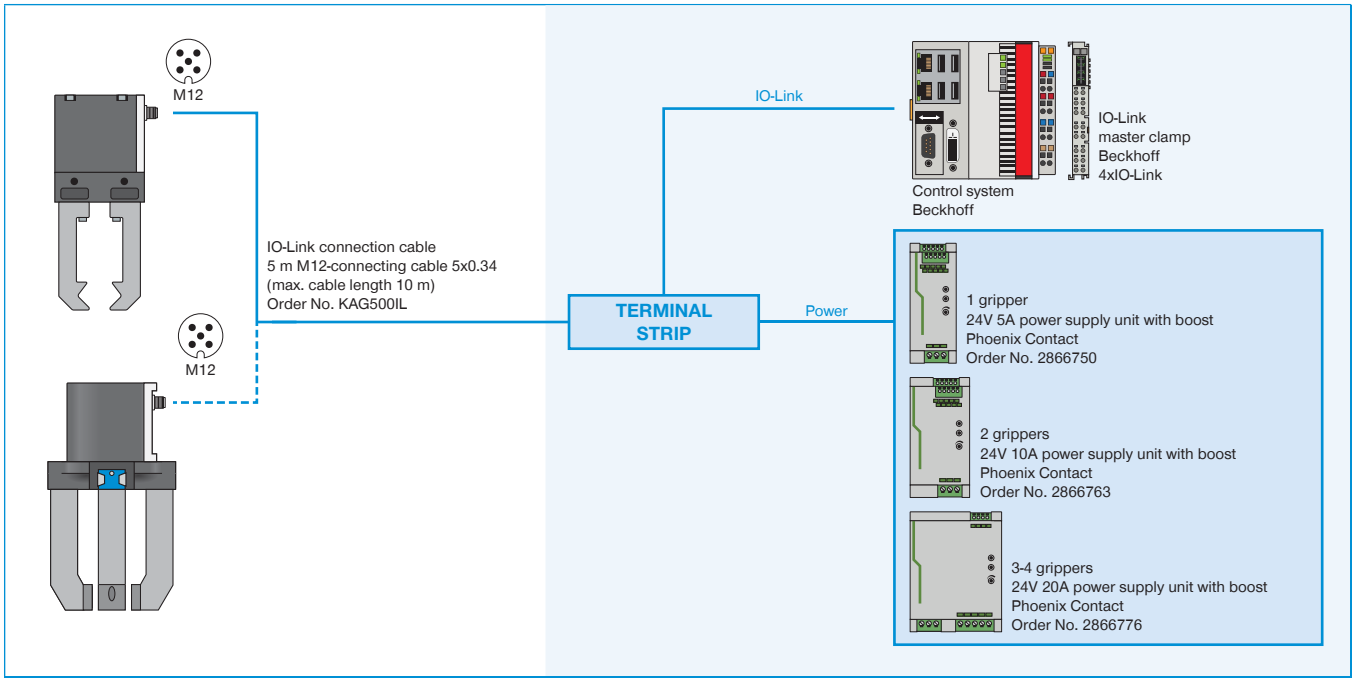

▶ GPP5000IL / GPD5000IL (IO-LINK) WIRING TO CONTROL CABINET (SIEMENS)

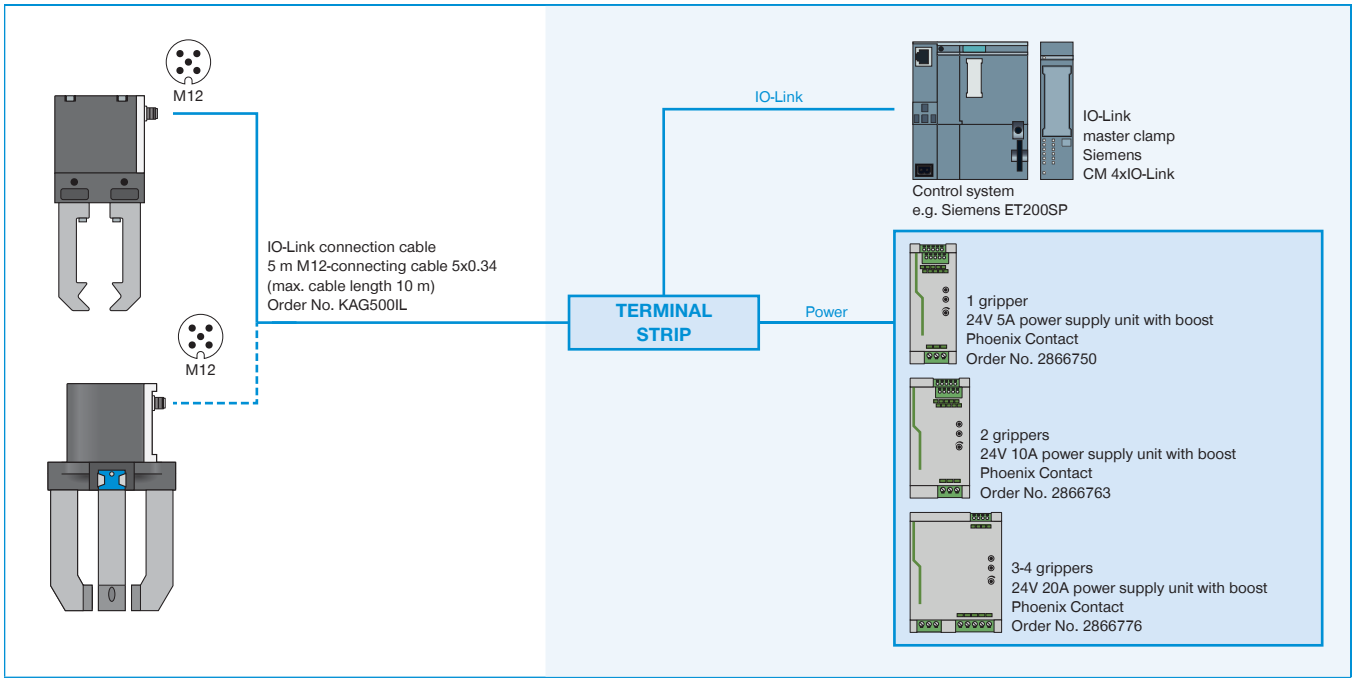

▶ GPP5000IL / GPD5000IL (IO-LINK) WIRING TO IO-LINK MASTER IP67 (BECKHOFF)

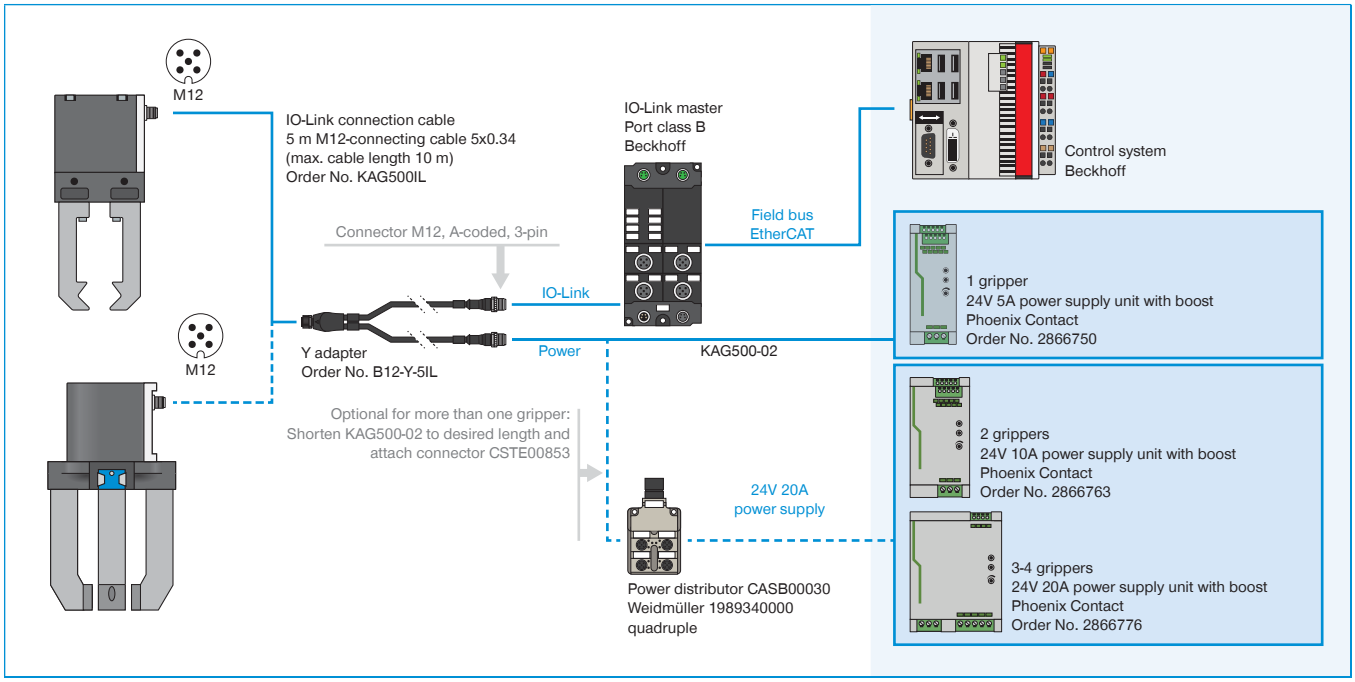

▶ GPP5000IL / GPD5000IL (IO-LINK) WIRING TO IO-LINK MASTER IP67 (BECKHOFF)

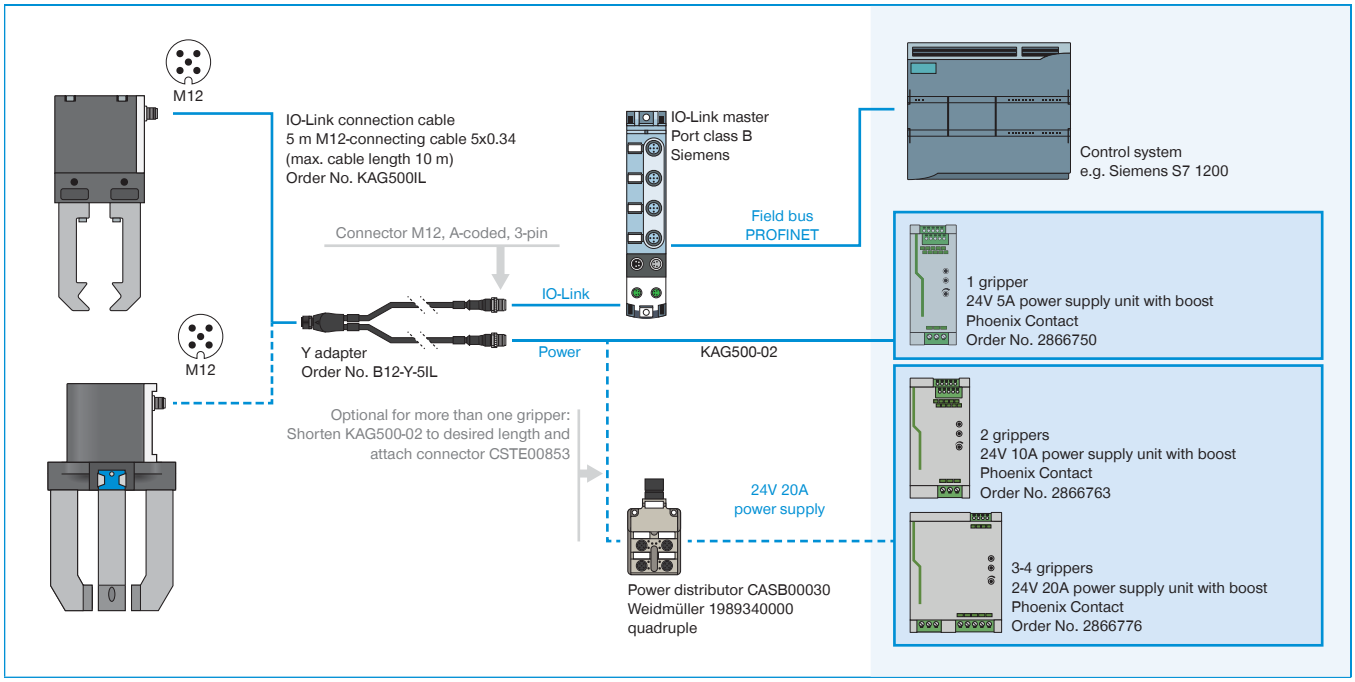
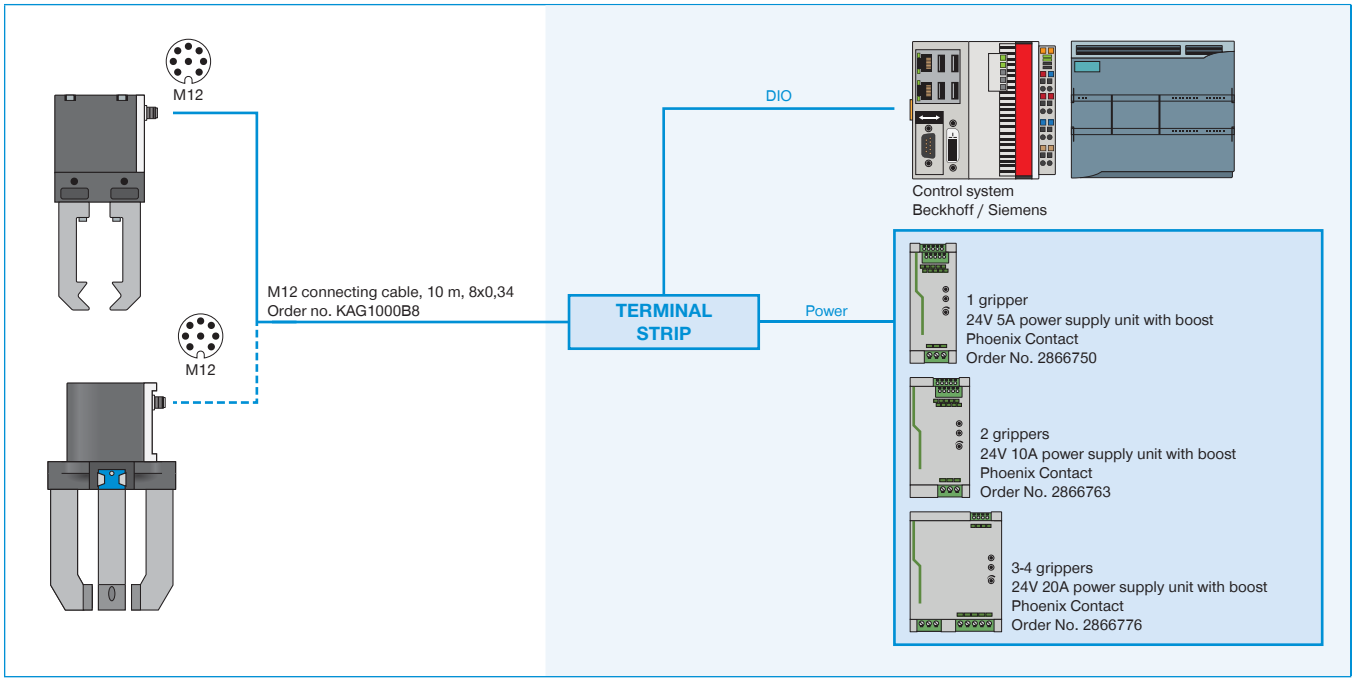
► GEP5000 / GED5000 (DIGITAL IO) WIRING TO CONTROL CABINET