2-JAW ANGULAR GRIPPERS
SERIES GG1000

▶ PRODUCT ADVANTAGES

“The strong”

- **High gripping force**

  Using the high gripping force, you can safely handle even the heaviest workpieces

- **High moment load**

  The generously scaled angular gear box provides the highest possible durability for your application

- **Failure-free continuous operation**

  Our uncompromising “Made in Germany” quality guarantees up to 10 million maintenance-free cycles

▶ SERIES CHARACTERISTICS

Installation size	Version	
GG1XXX	NC	FNC
Gripper jaws with mounting possibility on the side		●
Spring closing C	●	●
10 million maintenance-free cycles (max.)	●	●
Inductive sensor	●	●
Magnetic field sensor	●	●
Purged air	●	●
IP40	●	●

▶ BENEFITS IN DETAIL

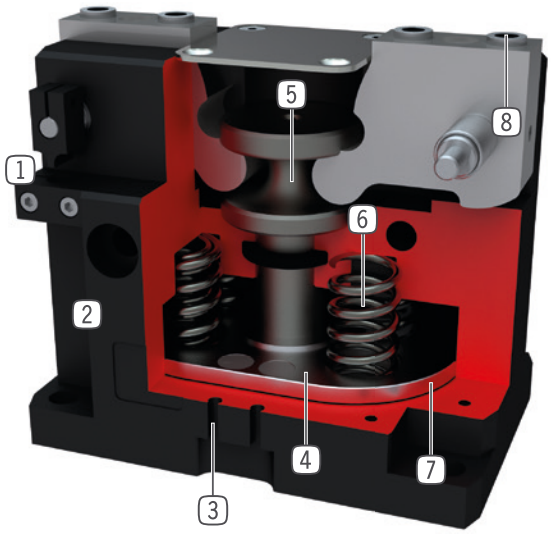

1 **Cam-switch and mounting block**
- for position sensing

2 **Robust, lightweight housing**
- Hard-coated aluminum alloy

3 **Sensing slot**
- groove for positioning of the magnetic field sensor

4 **Permanent magnet**
- sensing of the piston setting position via magnetic field sensors

5 **Positively driven lever mechanism**
- synchronized the movement of the gripper jaws

6 **Integrated gripping force safety device**
- spring integrated into cylinder as energy storage

7 **Drive**
- double-acting pneumatic cylinder

8 **Removable centering sleeves**
- quick and economical positioning of the gripper fingers

▶ TECHNICAL DATA

Installation size	Stroke [°]	Gripping force [N]	Weight [kg]	IP class
GG1065	20	2910 - 4160	1,3 - 1,4	IP40
GG1085	20	7120 - 9670	2,8 - 3,2	IP40
GG1110	20	18665 - 23240	6,3 - 6,7	IP40
GG1140	20	29110 - 36470	12,4 - 13	IP40

▶ FURTHER INFORMATION IS AVAILABLE ONLINE

All information just a click away at: www.zimmer-group.com. Find data, illustrations, 3D models and operating instructions for your installation size using the order number for your desired product. Quick, clear and always up-to-date.

2-JAW ANGULAR GRIPPERS
INSTALLATION SIZE GG1140

▶ PRODUCT SPECIFICATIONS

▶ Gripping force diagram

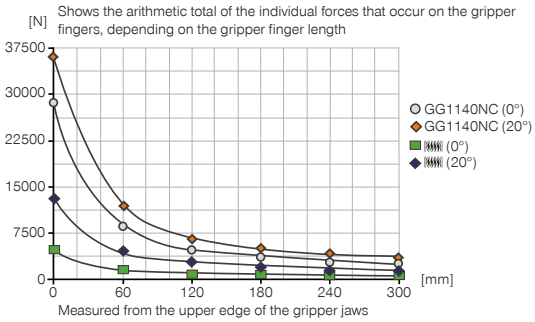

▶ Forces and moments

Displays static forces and moments that can also have an effect, besides the gripping force.

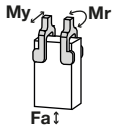

Mr [Nm]	110
My [Nm]	120
Fa [N]	1500

▶ INCLUDED IN DELIVERY

4 [piece]
Centering Disc
DST42000

▶ RECOMMENDED ACCESSORIES

ENERGY SUPPLY

GV1-4X8
Straight Fittings - Quick Connect Style

SENSORS

KB8-43
Mounting block

KHA1140-8
Alternate proximity bracket

NJ8-E2S
Inductive proximity switch, M8

MFS01-S-KHC-P1-PNP
Magnetic field sensor angled, cable 0.3 m - M8 connector

MFS02-S-KHC-P1-PNP
Magnetic field sensor straight, cable 0.3 m - M8 connector

SENSORS

MFS01-S-KHC-P2-PNP
2-point sensor angled, cable 0.3 m - M8 connector

MFS02-S-KHC-P2-PNP
2-point sensor straight, cable 0.3 m - M8 connector

CONNECTIONS / OTHER

HES0008
Stroke adjustment screw

KAG500
Plug-in connector Straight Cable 5m - Socket M8 (female)

KAW500
Plug-in connector Angled Cable 5m - Socket M8 (female)

	► Technical data	
Order no.	**GG1140NC**	**GG1140FNC**
Stroke per jaw [°]	20	20
Gripping moment in closing max. [Nm]	725	725
Gripping moment secured by spring min. [Nm]	143	143
Gripping force in closing at 0° [N]	29110	29110
Gripping force in closing max. (at 20°) [N]	36470	36470
Gripping force secured by spring (at 0°) [N]	5740	5740
Gripping force secured by spring (at 20°) [N]	13110	13110
Closing time [s]	0.25	0.25
Opening time [s]	0.5	0.5
Repetition accuracy +/- [mm]	0.05	0.05
Operating pressure min. [bar]	4	4
Operating pressure max. [bar]	8	8
Nominal operating pressure [bar]	6	6
Operating temperature min. [°C]	5	5
Operating temperature max. [°C]	+80	+80
Air volume per cycle [cm³]	760	760
Protection to IEC 60529	IP40	IP40
Weight [kg]	12.4	13

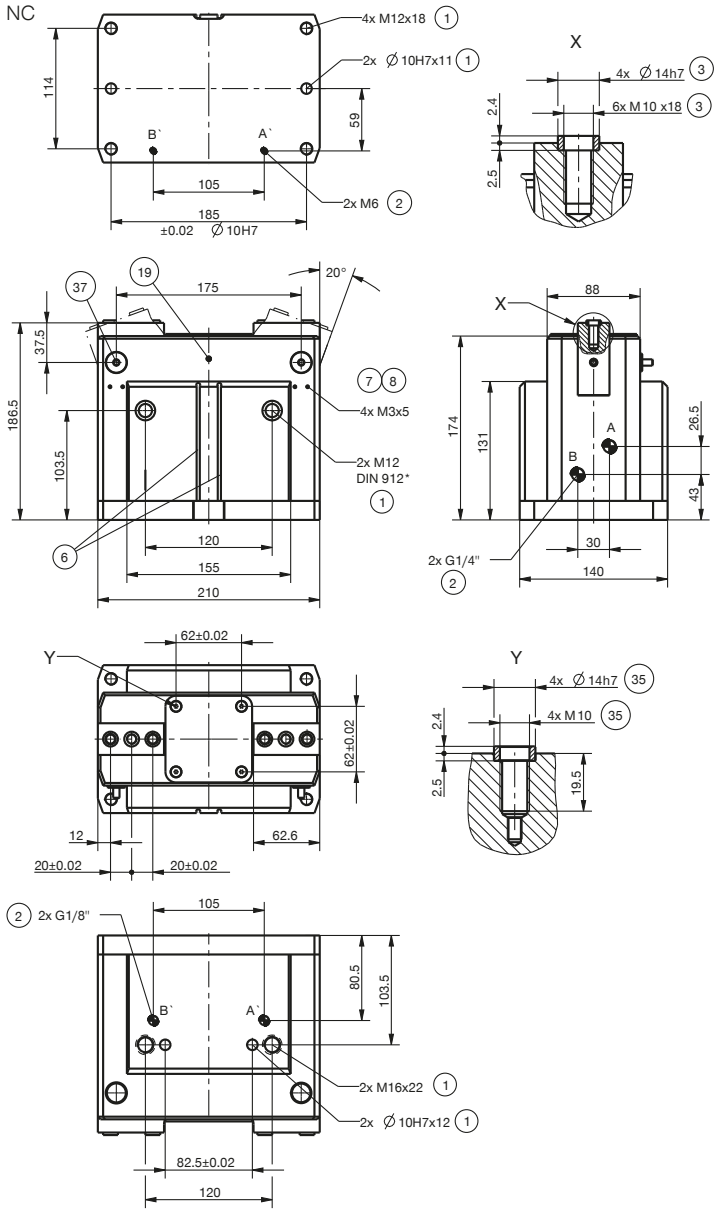

1. Gripper attachment
2. Energy supply
3. Fixing for gripper finger
6. Integrated slot for magnetic field sensor
7. Fixing for mounting block
8. Fixing clamping bracket (KHA)
19. Air purge connection option
35. Mounting posibillity for stroke adjustment screwe
37. Mounting posibillity for cam switch
38. Adapter
39. Gripper
A. Air connection (close)
B. Air connection (open)
A'. Air connection, alternative (close)
B'. Air connection, alternative (open)

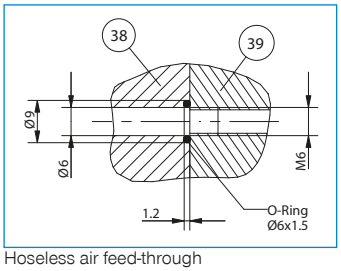
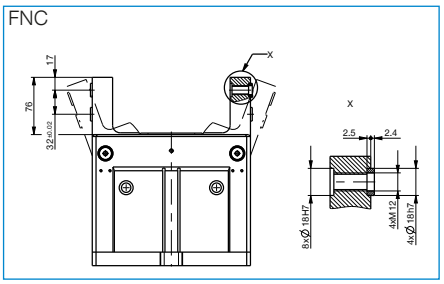
Hoseless air feed-through