2-JAW RADIAL GRIPPER
SERIES GG4000

▶ PRODUCT ADVANTAGES

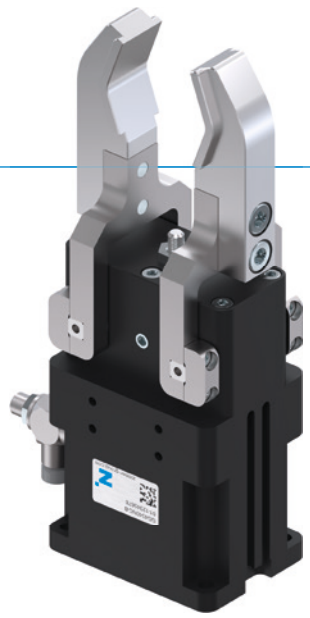

“The sealed”

- **Suitable for use under extreme conditions**

  The sealed rotation axis guarantees process reliability even under the harshest conditions

- **Smooth stroke configuration**

  You can adjust the 180° opening angle to be unique to your application using an adjusting screw

- **Failure-free continuous operation**

  Our uncompromising “Made in Germany” quality guarantees up to 10 million maintenance-free cycles

▶ SERIES CHARACTERISTICS

Installation size	Version	
GG40XX-B	NC	SC
Spring closing C	●	●
High-strength S		●
10 million maintenance-free cycles (max.)	●	●
Inductive sensor	●	●
Magnetic field sensor	●	●
Protected against corrosion	●	●
Purged air	●	●
IP64	●	●

▶ BENEFITS IN DETAIL

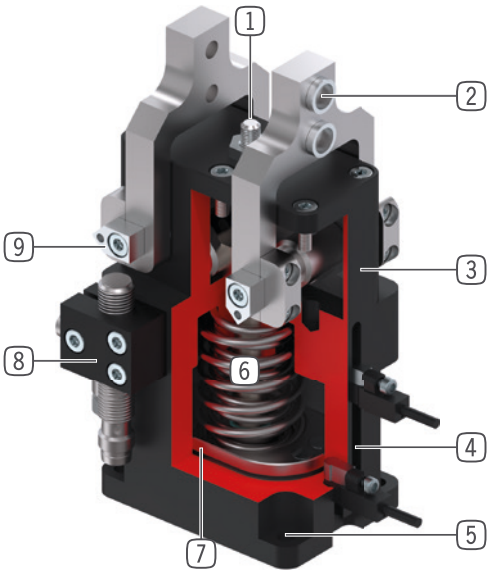

1 **Stroke adjustment screw**
- Infinitely adjustable opening stroke

2 **Removable centering sleeves**
- individual gripper finger mounting

3 **Robust, lightweight housing**
- Hard-coated aluminum alloy

4 **Sensing slot**
- mounting and positioning of magnetic field sensors

5 **Mounting and positioning**
- mounting possible from several sides for versatile positioning

6 **Integrated gripping force safety device**
- spring integrated into cylinder as energy storage

7 **Position sensing**
- permanent magnet for direct monitoring of piston movement

8 **Mounting block**
- mounting for inductive proximity switch

9 **Sealed rotation point**
- for use under extreme conditions

▶ TECHNICAL DATA

Installation size	Stroke per jaw (+/-) [°]	Gripping force [N]	Weight [kg]	IP class
GG4032	20 - 90	430 - 460	0,25	IP64
GG4040	20 - 90	700 - 800	0,5	IP64
GG4049	20 - 90	1000 - 1150	0,85	IP64
GG4058	20 - 90	1650 - 1900	1,4	IP64
GG4072	20 - 90	1950 - 2700	2,45	IP64
GG4084	20 - 90	3500 - 4000	4,5	IP64

▶ FURTHER INFORMATION IS AVAILABLE ONLINE

All information just a click away at: www.zimmer-group.com. Find data, illustrations, 3D models and operating instructions for your installation size using the order number for your desired product. Quick, clear and always up-to-date.

2-JAW RADIAL GRIPPER
INSTALLATION SIZE GG4032

▶ PRODUCT SPECIFICATIONS

▶ Gripping force diagram

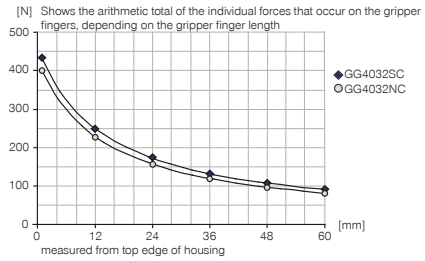

▶ Forces and moments

Displays static forces and moments that can also have an effect, besides the gripping force.

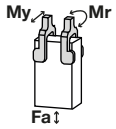

Mr [Nm]	8.5
My [Nm]	8.5
Fa [N]	180

▶ Moment of inertia

GG4032NC-B

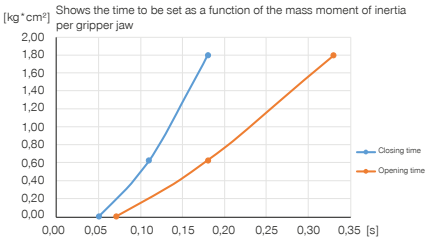

▶ Moment of inertia

GG4032SC-B

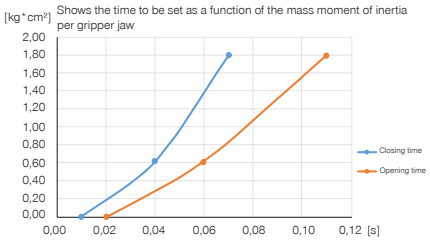

▶ INCLUDED IN DELIVERY

4 [piece]
Centering Disc
DST40600

2 [piece]
Flow Control Valves - with Swivel joint
DRVM5X4

▶ RECOMMENDED ACCESSORIES

ENERGY SUPPLY

DSV1-8E
Pressure safety valve with quick exhaust

SENSORS

KB4-06
Mounting block

NJ4-E2-01
Inductive proximity switch - Cable 5 m

MFS01-S-KHC-P1-PNP
Magnetic field sensor angled, cable 0.3 m - M8 connector

SENSORS

MFS02-S-KHC-P1-PNP
Magnetic field sensor straight, cable 0.3 m - M8 connector

MFS01-S-KHC-P2-PNP
2-point sensor angled, cable 0.3 m - M8 connector

MFS02-S-KHC-P2-PNP
2-point sensor straight, cable 0.3 m - M8 connector

MFS02-S-KHC-IL
Straight position sensor, cable 0.3 m – M8 plug

	► Technical data	
Order no.	**GG4032NC-B**	**GG4032SC-B**
Stroke per jaw [°]	90	20
Gripping moment in closing at 0° [Nm]	6.5	7
Gripping moment secured by spring min. [Nm]	1	1.5
Gripping force in closing at 0° [N]	430	460
Dead weight of mounted gripper finger max. [kg]	0.055	0.055
Length of the gripper fingers max. [mm]	65	65
Closing time [s]	0.06	0.02
Opening time [s]	0.08	0.03
Repetition accuracy +/- [mm]	0.05	0.05
Operating pressure min. [bar]	4	4
Operating pressure max. [bar]	8	8
Nominal operating pressure [bar]	6	6
Operating temperature min. [°C]	5	5
Operating temperature max. [°C]	+80	+80
Air volume per cycle [cm³]	13	10
Certifications	LABS / REACH / RoHS	LABS / REACH / RoHS
Protection to IEC 60529	IP64	IP64
Weight [kg]	0.27	0.27

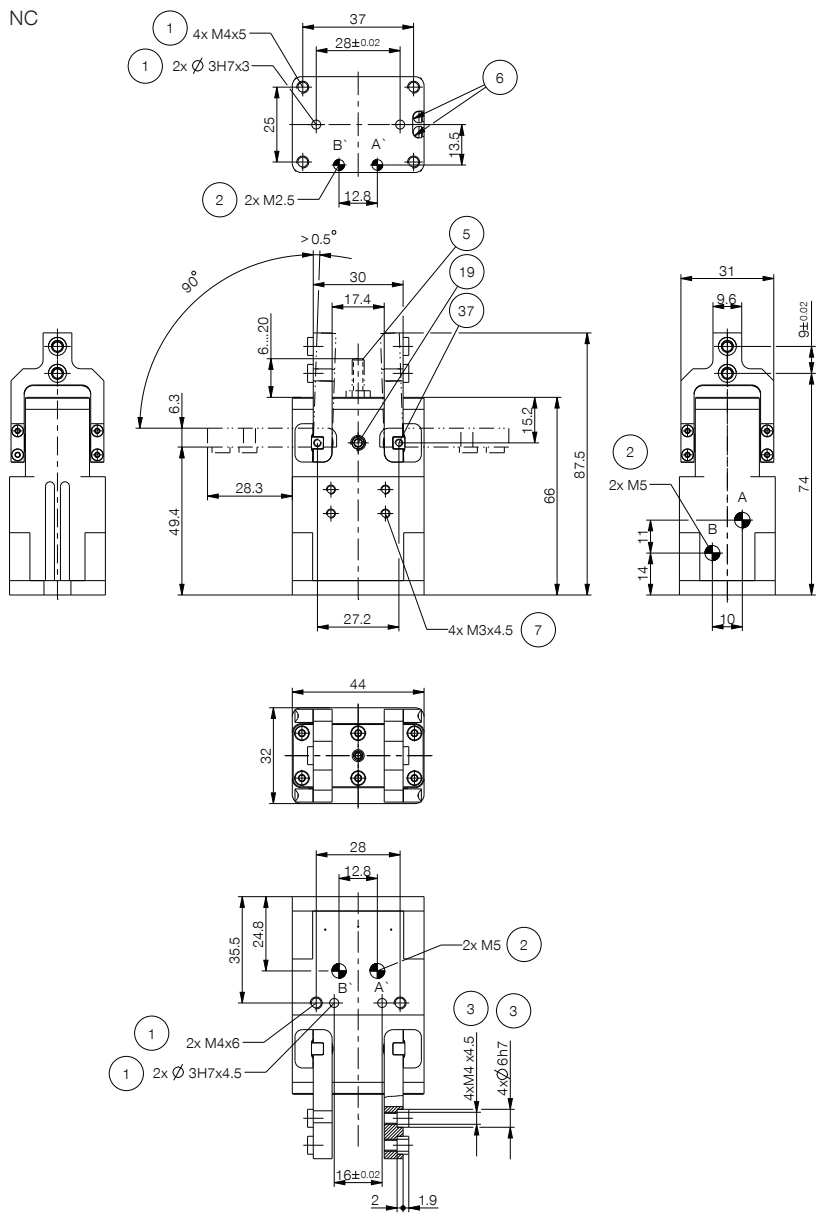
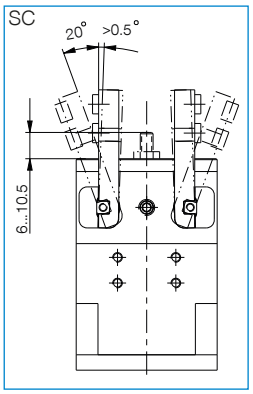
1. Gripper attachment
2. Energy supply
3. Fixing for gripper finger
5. Stroke adjustment screw
6. Integrated slot for magnetic field sensor
7. Fixing for mounting block
19. Air purge connection option
37. Mounting posibillity for cam switch
38. Adapter
39. Gripper
- Ⓐ Air connection (close)
- Ⓑ Air connection (open)
- Ⓐ' Air connection, alternative (close)
- Ⓑ' Air connection, alternative (open)