2-JAW PARALLEL GRIPPERS WITH LONG STROKE
SERIES GH6000

▶ PRODUCT ADVANTAGES

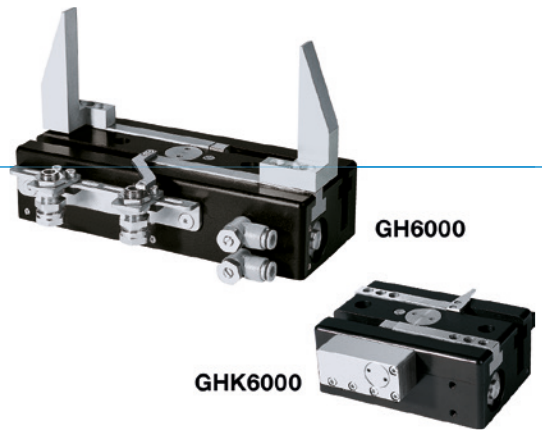

“The robust”

- **Gripper jaws may be up to 25% longer in comparison to the benchmark**

  The highest force and torque measurement enables flexible for maximum dynamics

- **Over 30% more powerful than the benchmark**

  Optimisation of weight and force reduces your application costs since all components can have a smaller scale

- **Failure-free continuous operation**

  Our uncompromising “Made in Germany” quality guarantees up to 10 million maintenance-free cycles

- **Securing the workpiece in case of drop in pressure above clamping element on the condition of a positive gripper jaw design (only for variant GHK)**

▶ SERIES CHARACTERISTICS

	Installation size / Variant	
	GH60XX	GHK60XX
Position maintenance by means of clamping element		●
10 million maintenance-free cycles (max.)	●	●
Inductive sensor	●	●
Magnetic field sensor	●	●
IP40	●	●

▶ BENEFITS IN DETAIL

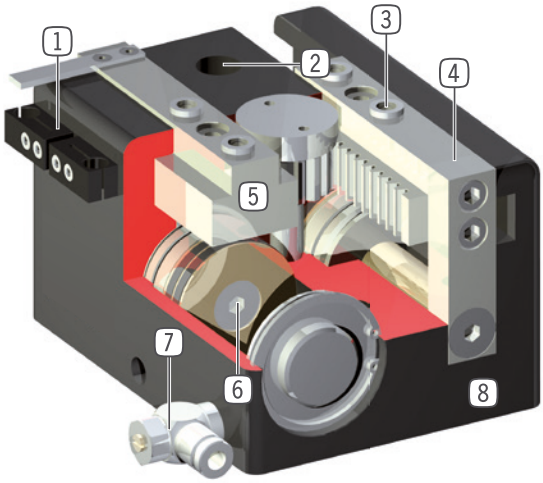

1 **Mounting block**
- mounting for inductive proximity switch

2 **Mounting and positioning**
- mounting possible from several sides for versatile positioning

3 **Removable centering sleeves**
- quick and economical positioning of the gripper fingers

4 **Gripper jaw**
- individual gripper finger mounting

5 **Precise long T-Slot guides**
- high forces and moments capacity

6 **Drive**
- two double-acting pneumatic cylinders
- synchronized by gearwheel

7 **Energy supply**
- possible from several sides
- CAUTION: always operate long stroke gripper with supplied exhaust air flow control valve (speed regulation)

8 **Robust, lightweight housing**
- Hard-coated aluminum alloy

▶ TECHNICAL DATA

Installation size	Stroke per jaw [mm]	Gripping force [N]	Weight [kg]	IP class
GH6000	20 - 80	120 - 155	0,33 - 0,76	IP40
GH6100	20 - 80	340 - 530	1 - 2,3	IP40
GH6200	20 - 150	850 - 1400	2,5 - 7,5	IP40
GH6300	60 - 150	1520 - 2270	7,3 - 12	IP40
GH6400	60 - 200	2600 - 3400	11 - 23	IP40

▶ FURTHER INFORMATION IS AVAILABLE ONLINE

All information just a click away at: www.zimmer-group.com. Find data, illustrations, 3D models and operating instructions for your installation size using the order number for your desired product. Quick, clear and always up-to-date.

2-JAW PARALLEL GRIPPERS WITH LONG STROKE
INSTALLATION SIZE GH6160

▶ PRODUCT SPECIFICATIONS

▶ Gripping force diagram

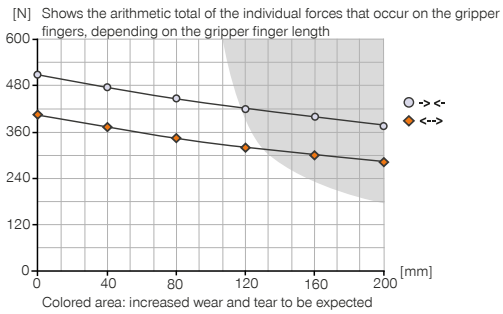

▶ Forces and moments

Displays static forces and moments that can also have an effect, besides the gripping force.

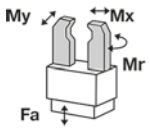

Mr [Nm]	85
Mx [Nm]	120
My [Nm]	75
Fa [N]	1500

▶ INCLUDED IN DELIVERY

2 [piece]
Mounting block
KB8-27

4 [piece]
Centering Disc
DST60800

2 [piece]
Flow Control Valves - with Swivel joint
DRV1-8X8

▶ YOU CAN FIND RECOMMENDED ACCESSORIES ON THE FOLLOWING PAGES

	► Technical data	
Order no.	**GH6160-B**	**GHK6160**
Stroke per jaw [mm]	60	60
Gripping force in closing [N]	510	510
Gripping force in opening [N]	400	400
Retention force in case of drop in pressure [N]		300
Closing time [s]	0.3	0.3
Opening time [s]	0.3	0.3
Dead weight of mounted gripper finger max. [kg]	1	1
Length of the gripper fingers max. [mm]	200	200
Repetition accuracy +/- [mm]	0.05	0.05
Operating pressure min. [bar]	3	3
Operating pressure max. [bar]	8	8
Nominal operating pressure [bar]	6	6
Operating temperature min. [°C]	+5	+5
Operating temperature max. [°C]	+80	+80
Air volume per cycle [cm³]	109	109
Certifications	LABS / REACH / RoHS	LABS / REACH / RoHS
Protection to IEC 60529	IP40	IP40
Weight [kg]	1.9	2.1

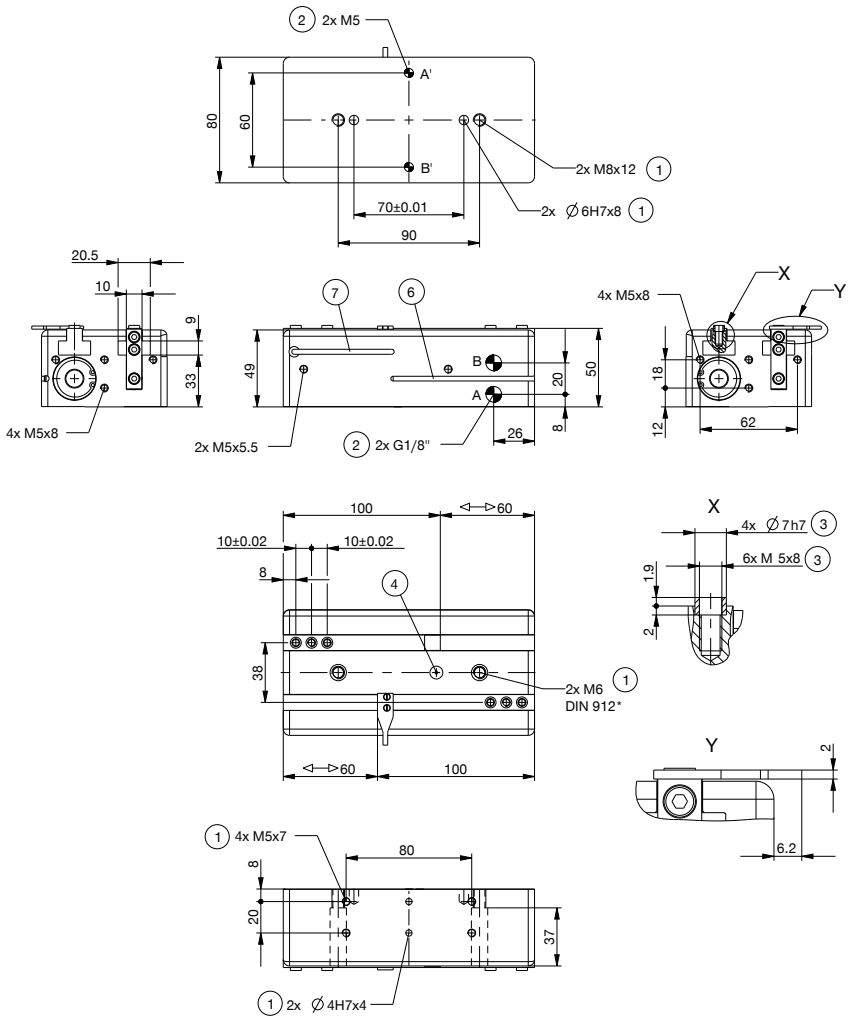

1 Gripper attachment
2 Energy supply
3 Fixing for gripper finger
4 Lubrication nipple
6 Integrated slot for magnetic field sensor
7 Fixing for mounting block
38 Adapter
39 Gripper
A Air connection (close)
B Air connection (open)
A' Air connection, alternative (close)
B' Air connection, alternative (open)

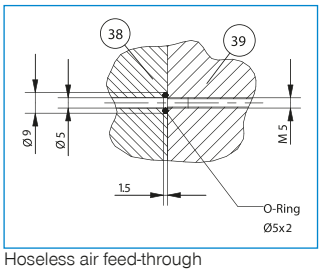

Hoseless air feed-through

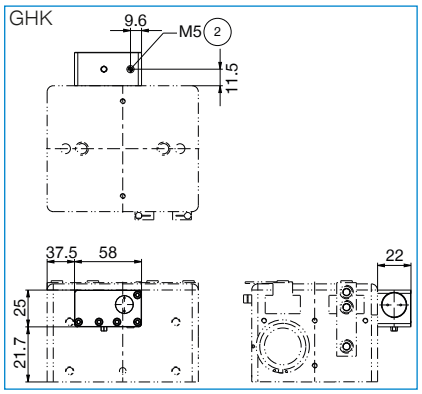

2-JAW PARALLEL GRIPPERS WITH LONG STROKE
SERIES GH6000 - ACCESSORIES

► ACCESORIES

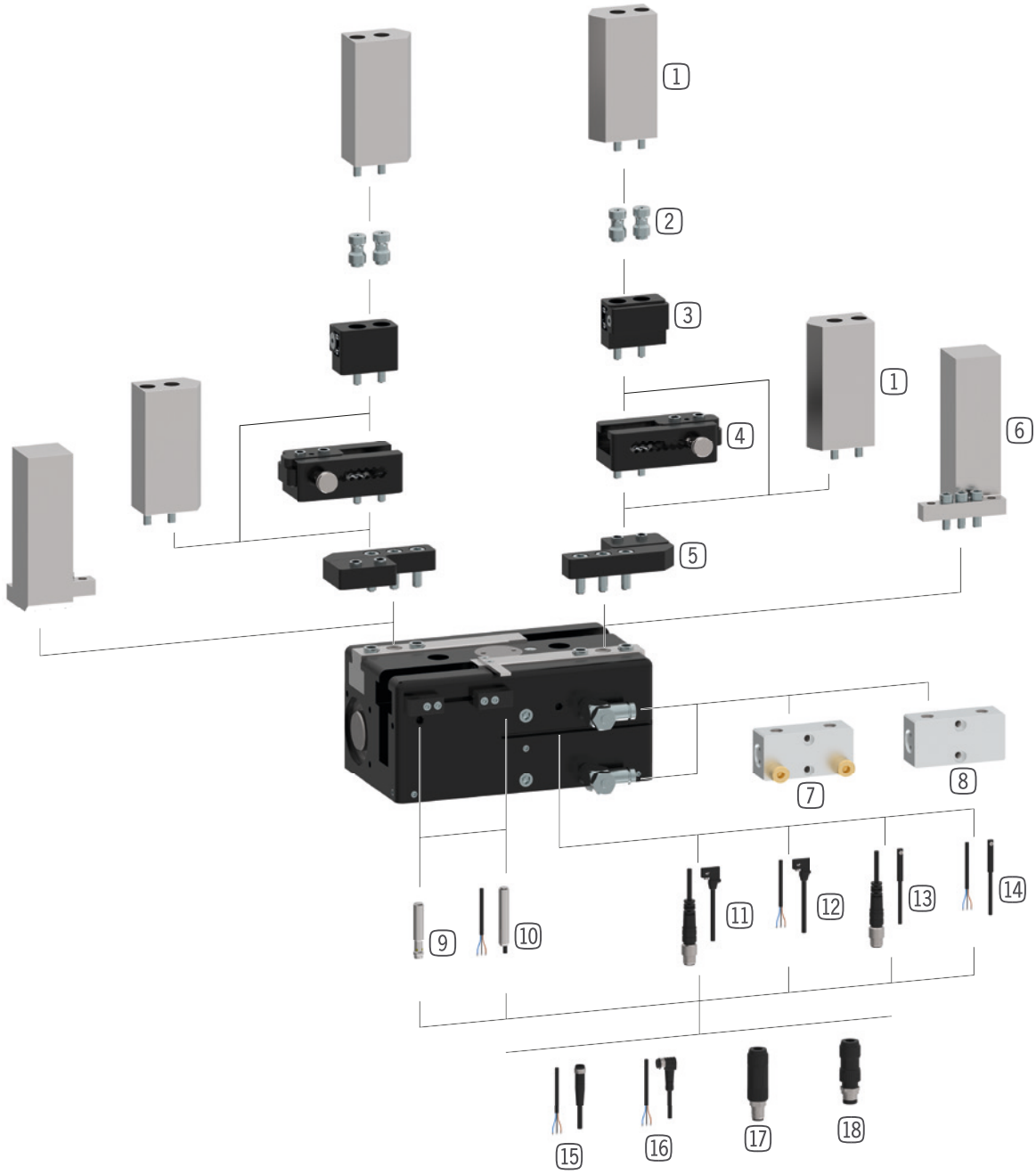

► RECOMMENDED ACCESSORIES GH6000

Pos.	Order no.		Accessories
1	**UB5004AL**	*	Universal jaw aluminium
1	**UB5004ST**	*	Universal jaw steel
2	**WB5004L**	*	Changeable jaw, loose part set
3	**WB5004F**	*	Changeable jaw, fixed part
4	**EB5004ST**	*	Steel adjustment jaw
4	**EB5004AL**	*	Aluminum adjustment jaw
5	**APGH6000**		Adapter plate
6	**UB6000-B**		Universal jaw set aluminium
7	**DSV1-8E**		Pressure safety valve with quick exhaust
8	**DSV1-8**		Pressure safety valve

*in conjunction with pos. 5

Pos.	Order no.		Accessories
9	**NJ6.5-E2S**	**	Inductive proximity switch – M8
10	**NJ6.5-E2-01**	**	Inductive proximity switch - Cable 5 m
11	**MFS01-S-KHC-P1-PNP**		Magnetic field sensor angled, cable 0.3 m - M8 connector
12	**MFS01-K-KHC-P1-PNP**		Magnetic field sensor angled, cable 5 m
13	**MFS02-S-KHC-P1-PNP**		Magnetic field sensor straight, cable 0.3 m - M8 connector
14	**MFS02-K-KHC-P1-PNP**		Magnetic field sensor straight, cable 5 m
15	**KAG500**		Plug-in connector Straight Cable 5m - female connector M8
16	**KAW500**		Plug-in connector Angled Cable 5m - female connector M8
17	**S8-G-3**		Plug-in connector customizable Straight - male connector M8
18	**S12-G-3**		Plug-in connector customizable Straight - male connector M12

**not with GH6020

▶ RECOMMENDED ACCESSORIES GH6100

Pos.	Order no.		Accessories
1	**UB5006AL**	*	Universal jaw aluminium
1	**UB5006ST**	*	Universal jaw steel
2	**WB5006L**	*	Changeable jaw, loose part set
3	**WB5006F**	*	Changeable jaw, fixed part
4	**EB5006ST**	*	Steel adjustment jaw
4	**EB5006AL**	*	Aluminum adjustment jaw
5	**APGH6100**		Adapter plate
6	**UB6100-B**		Universal jaw set aluminium
7	**DSV1-8E**		Pressure safety valve with quick exhaust
8	**DSV1-8**		Pressure safety valve

*in conjunction with pos. 5

Pos.	Order no.		Accessories
9	**NJ8-E2S**	**	Inductive proximity switch – M8
10	**NJ8-E2**	**	Inductive proximity switch - Cable 5 m
11	**MFS01-S-KHC-P1-PNP**		Magnetic field sensor angled, cable 0.3 m - M8 connector
12	**MFS01-K-KHC-P1-PNP**		Magnetic field sensor angled, cable 5 m
13	**MFS02-S-KHC-P1-PNP**		Magnetic field sensor straight, cable 0.3 m - M8 connector
14	**MFS02-K-KHC-P1-PNP**		Magnetic field sensor straight, cable 5 m
15	**KAG500**		Plug-in connector Straight Cable 5m - female connector M8
16	**KAW500**		Plug-in connector Angled Cable 5m - female connector M8
17	**S8-G-3**		Plug-in connector customizable Straight - male connector M8
18	**S12-G-3**		Plug-in connector customizable Straight - male connector M12

**not with GH6120

▶ RECOMMENDED ACCESSORIES GH6200

Pos.	Order no.		Accessories
1	**UB5008AL**	*	Universal jaw aluminium
1	**UB5008ST**	*	Universal jaw steel
2	**WB5008L**	*	Changeable jaw, loose part set
3	**WB5008F**	*	Changeable jaw, fixed part
4	**EB5008ST**	*	Steel adjustment jaw
4	**EB5008AL**	*	Aluminum adjustment jaw
5	**APGH6200**		Adapter plate
6	**UB6200-B**		Universal jaw set aluminium
7	**DSV1-8E**		Pressure safety valve with quick exhaust
8	**DSV1-8**		Pressure safety valve

*in conjunction with pos. 5

Pos.	Order no.		Accessories
9	**NJ8-E2S**	**	Inductive proximity switch – M8
10	**NJ8-E2**	**	Inductive proximity switch - Cable 5 m
11	**MFS01-S-KHC-P1-PNP**		Magnetic field sensor angled, cable 0.3 m - M8 connector
12	**MFS01-K-KHC-P1-PNP**		Magnetic field sensor angled, cable 5 m
13	**MFS02-S-KHC-P1-PNP**		Magnetic field sensor straight, cable 0.3 m - M8 connector
14	**MFS02-K-KHC-P1-PNP**		Magnetic field sensor straight, cable 5 m
15	**KAG500**		Plug-in connector Straight Cable 5m - female connector M8
16	**KAW500**		Plug-in connector Angled Cable 5m - female connector M8
17	**S8-G-3**		Plug-in connector customizable Straight - male connector M8
18	**S12-G-3**		Plug-in connector customizable Straight - male connector M12

**not with GH6220

▶ RECOMMENDED ACCESSORIES GH6300

Pos.	Order no.		Accessories
1	**UB5010ST**	*	Universal jaw steel
1	**UB5010AL**	*	Universal jaw aluminium
2	**WB5010L**	*	Changeable jaw, loose part set
3	**WB5010F**	*	Changeable jaw, fixed part
4	**EB5010ST**	*	Steel adjustment jaw
4	**EB5010AL**	*	Aluminum adjustment jaw
5	**APGH6300**		Adapter plate
7	**DSV1-8E**		Pressure safety valve with quick exhaust
8	**DSV1-8**		Pressure safety valve
9	**NJ8-E2S**		Inductive proximity switch – M8

*in conjunction with pos. 5

Pos.	Order no.	Accessories
10	**NJ8-E2**	Inductive proximity switch - Cable 5 m
11	**MFS01-S-KHC-P1-PNP**	Magnetic field sensor angled, cable 0.3 m - M8 connector
12	**MFS01-K-KHC-P1-PNP**	Magnetic field sensor angled, cable 5 m
13	**MFS02-S-KHC-P1-PNP**	Magnetic field sensor straight, cable 0.3 m - M8 connector
14	**MFS02-K-KHC-P1-PNP**	Magnetic field sensor straight, cable 5 m
15	**KAG500**	Plug-in connector Straight Cable 5m - female connector M8
16	**KAW500**	Plug-in connector Angled Cable 5m - female connector M8
17	**S8-G-3**	Plug-in connector customizable Straight - male connector M8
18	**S12-G-3**	Plug-in connector customizable Straight - male connector M12

▶ RECOMMENDED ACCESSORIES GH6400

Pos.	Order no.		Accessories
1	**UB5016ST**	*	Universal jaw steel
1	**UB5016AL**	*	Universal jaw aluminium
2	**WB5016L**	*	Changeable jaw, loose part set
3	**WB5016F**	*	Changeable jaw, fixed part
4	**EB5016ST**	*	Steel adjustment jaw
4	**EB5016AL**	*	Aluminum adjustment jaw
5	**APGH6400**		Adapter plate
7	**DSV1-8E**		Pressure safety valve with quick exhaust
8	**DSV1-8**		Pressure safety valve
9	**NJ8-E2S**		Inductive proximity switch – M8

*in conjunction with pos. 5

Pos.	Order no.	Accessories
10	**NJ8-E2**	Inductive proximity switch - Cable 5 m
11	**MFS01-S-KHC-P1-PNP**	Magnetic field sensor angled, cable 0.3 m - M8 connector
12	**MFS01-K-KHC-P1-PNP**	Magnetic field sensor angled, cable 5 m
13	**MFS02-S-KHC-P1-PNP**	Magnetic field sensor straight, cable 0.3 m - M8 connector
14	**MFS02-K-KHC-P1-PNP**	Magnetic field sensor straight, cable 5 m
15	**KAG500**	Plug-in connector Straight Cable 5m - female connector M8
16	**KAW500**	Plug-in connector Angled Cable 5m - female connector M8
17	**S8-G-3**	Plug-in connector customizable Straight - male connector M8
18	**S12-G-3**	Plug-in connector customizable Straight - male connector M12

2-JAW PARALLEL GRIPPERS WITH LONG STROKE
SERIES GH6000 FUNCTIONAL DESCRIPTION

GRIPPING COMPONENTS

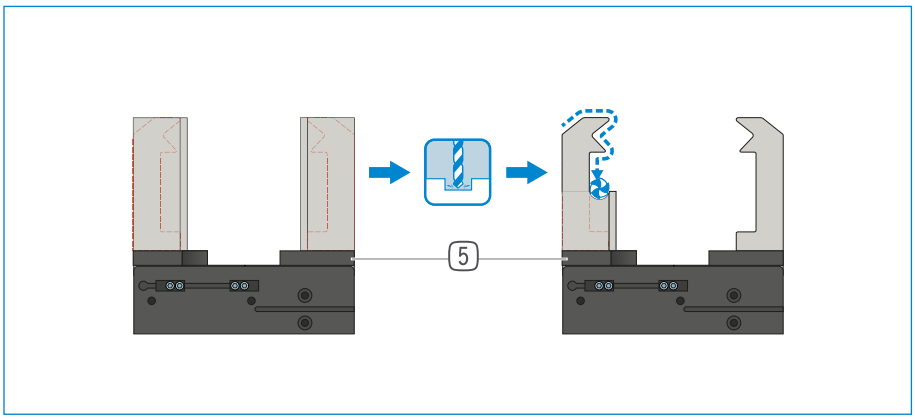

Universal jaws – UB5000

Can be used immediately or for individual reprocessing

The gripper blanks are available in aluminum (AL) and steel (ST) versions and are installed directly on the gripper using the screws in the scope of delivery. The fits for the centering sleeves are already in place for this purpose. One universal jaw is required for each gripper jaw.

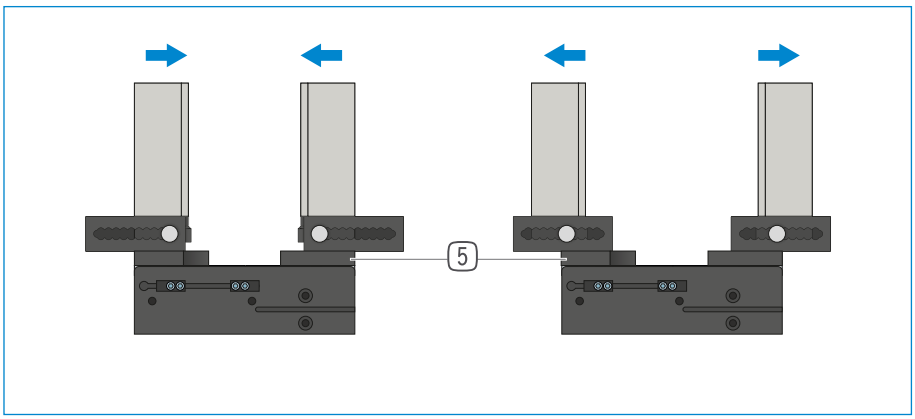

Adjustment jaws – EB5000

For tool-free adaptation of the gripper range

By manually activating the locking mechanism, which is pre-tensioned by a spring, the adjustment jaw can be moved within a grid of detent notches that has a number scale. Depending on the forces and torques that apply, the adjustment jaws are available in aluminum (AL) and steel (ST) versions. One adjustment jaw is required for each gripper jaw.

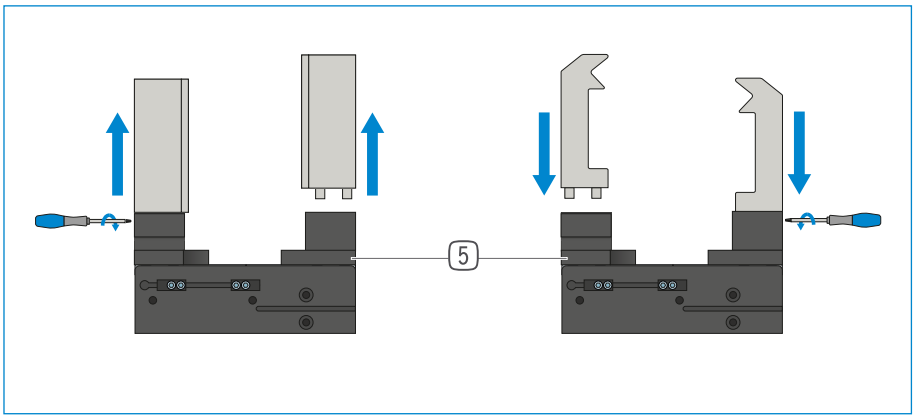

Interchangeable jaws – WB5000

Enable fast change of individual gripper fingers

For each gripper jaw, a fixed part and at least one loose part set is needed, depending on the number of gripper fingers to be changed. Manual locking via the Torx wrench included in the scope of delivery of the fixed part can take place from two sides.

THE GRIPPING COMPONENTS CAN BE COMBINED!

The gripping components listed above can be combined with each other. For connection to the gripper, the adapter plate (5) , which is included in the recommended accessories for the gripper, is required.

GRIPPING COMPONENTS

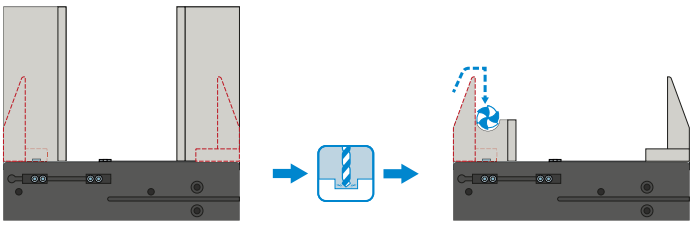

Universal jaws – UB6000-B

Can be used immediately or for individual reprocessing

The gripper blanks are available in an aluminum (AL) version and are installed directly on the gripper using the screws in the scope of delivery. The fits for the centering sleeves are already in place for this purpose. One universal jaw set is required for each gripper.

ENERGY SUPPLY

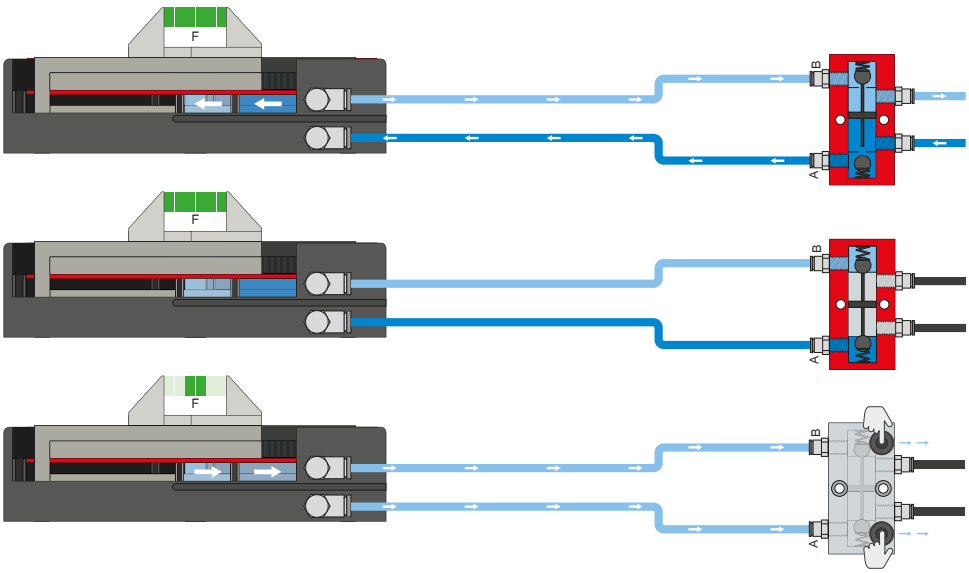

Pressure safety valve – DSV

Ensures safe retention of force and position if the system pressure drops

The integrated double check valve, which can be unlocked, retains the system pressure of the gripper in case of EMERGENCY STOP. To ensure the function, the valve must be installed as close to the gripper's air connection as possible. In variant E, two pushbuttons are installed that allow for controlled bleeding of the gripper.

SENSORS

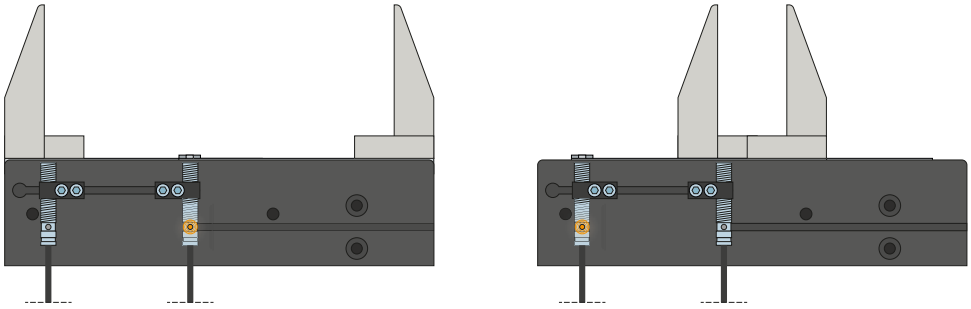

Inductive sensors – NJ

The mounting block is aligned to the cam switch, and the sensor is guided into the mounting block until the required switching distance to the cam switch is reached. Fine adjustment can be made by moving the mounting block again. The sensors are available in versions with 5 m cables with exposed leads and 0,3 m cable with male connector, as well as with direct male connector orientation.

SENSORS

MFS02

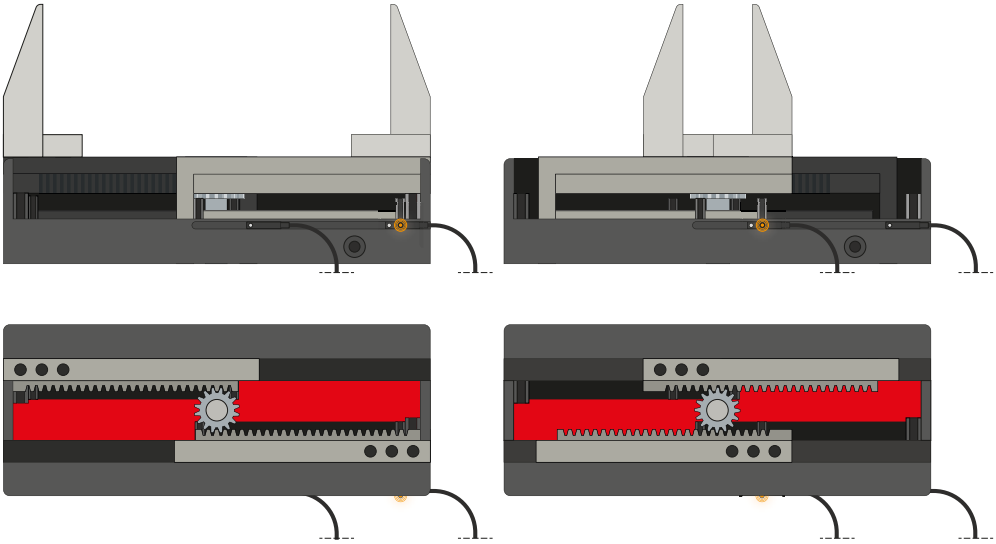

MFS01

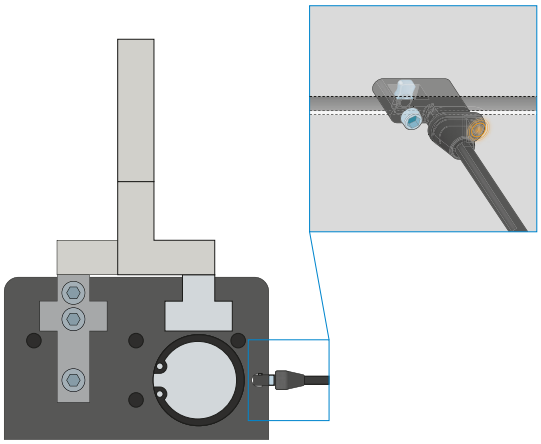

1-point magnetic field sensors – MFS

For non-contact sensing of the piston position

These sensors are installed in the C-groove of the gripper and detect the magnet attached to the piston of the gripper. To ensure use in a wide variety of space conditions, the sensors are available in two variants. While the horizontal MFS02, with straight cable outlet, disappears into the C-groove of the gripper almost completely, the vertical MFS01 is taller, but has a cable outlet that is offset at an angle of 90°. The variants are available in versions with 5 m cables with exposed leads and 0,3 m cable with connector.

CONNECTIONS / OTHER

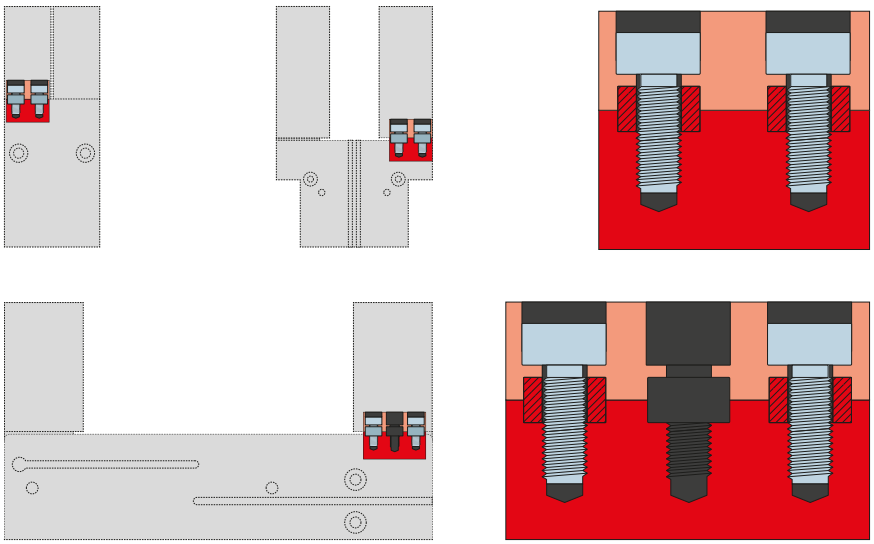

Centering sleeves

For defined position measurement of the gripper fingers

The centering sleeves are inserted into the fits of the gripper jaws to define the position of the gripper fingers. The centering sleeves are comparable to a pin connection.

2-JAW PARALLEL GRIPPERS WITH LONG STROKE
SERIES GH6000 GRIPPER FINGER LENGTH

MAXIMUM GRIPPER FINGER LENGTH

The examples show the maximum horizontal (a) and vertical (b) gripper finger length for a GH6140-B, illustrated by the blue area. The approach is identical for all other grippers of this series. The projection (a) is determined by multiplying the max. length of the gripper fingers (b) by 0.8. For the max. length of the gripper fingers, refer to the data sheet of the respective gripper.

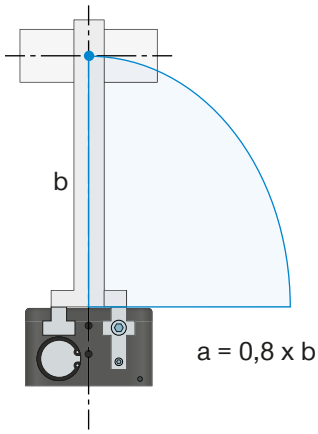

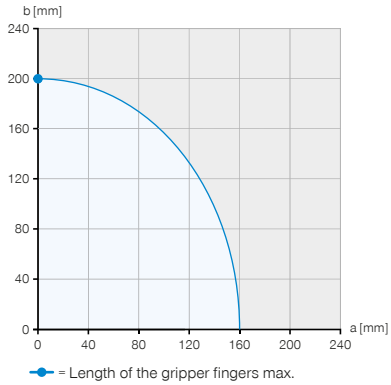

Example 1
Vertical force application point
a = 0 mm
b = 0 mm

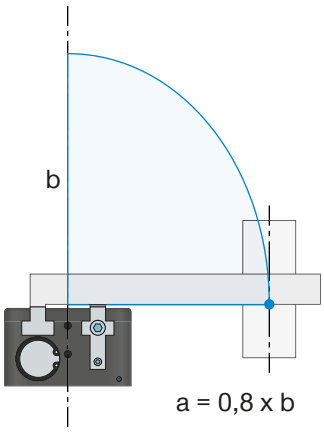

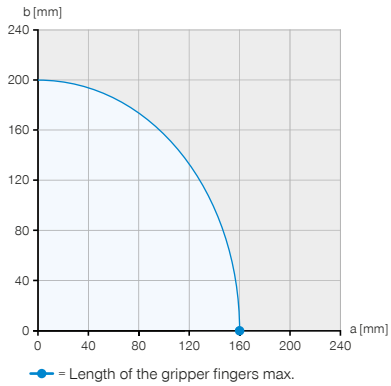

Example 2
Horizontal force application point
a = 160 mm
b = 0 mm

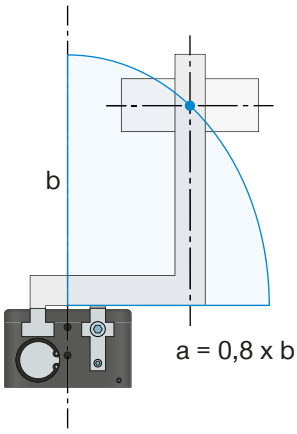

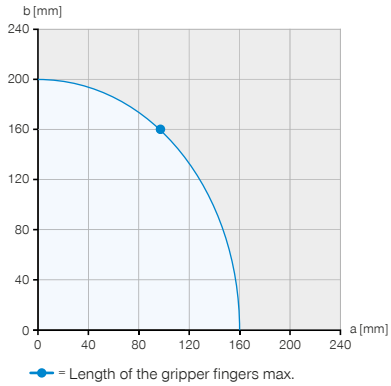

Example 3
Maximum permissible projection
a = 96 mm
b = 160 mm

GRIPPING FORCE AS A FUNCTION OF GRIPPER FINGER LENGTH

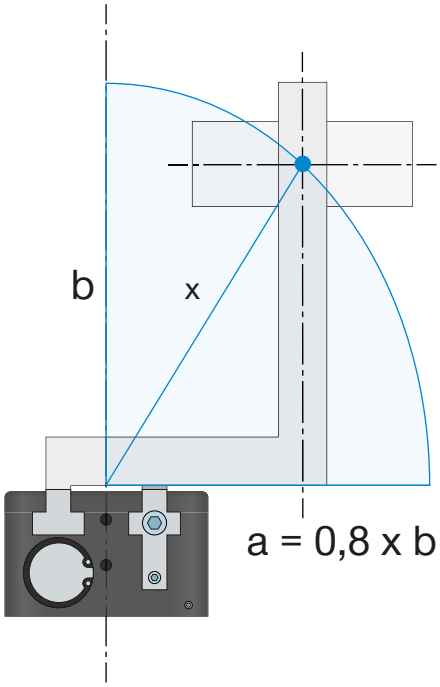

Gripping force diagram

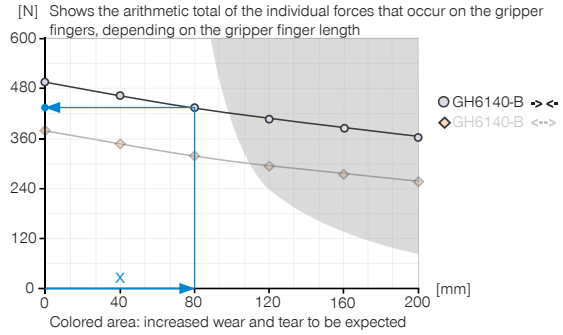

Example 4

Resulting gripper finger length for determining the gripping force

a = 55 mm

b = 58 mm

$$x = \sqrt{55^2 + 58^2} = 80 \Rightarrow 435\ N$$

The specified maximum gripper jaw length in the gripper technical data refers to a vertical (b) alignment of the gripper jaws. With a horizontal (a) overhang, the maximum gripper jaw length is reduced accordingly. The table shows the maximum gripper jaw lengths of the individual sizes.
If the required gripper jaw length lies within the tinted area of the gripping force diagram, increased wear must be expected - possibly reduce pressure.

TECHNICAL DATA

Installation size	Dead weight of mounted gripper finger max. [kg]	Length of the gripper fingers max. vertical (b) [mm]	Length of the gripper fingers max. horizontal (a) [mm]
GH6000	0.3	150	120
GH6100	1	200	160
GH6200	2.5	250	200
GH6300	3.5	300	240
GH6400	6	400	320

2-JAW PARALLEL GRIPPERS WITH LONG STROKE
SERIES GH6000 GRIPPER FINGER WEIGHT

DEAD WEIGHT OF MOUNTED GRIPPER FINGER

The 6000 gripper series is equipped with a T-slot guide. For the gripper finger design, we take two different cases into account.

1. Static

The workpiece is gripped or gripper without workpiece and the opening or closing stroke of the gripper is not carried out. This is where the schematic diagram of the forces and torques included in the data sheet becomes important.

Example

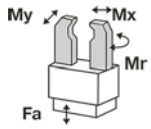

Mr [Nm]	70
Mx [Nm]	100
My [Nm]	60
Fa [N]	1500

2. Load on the guide when opening and closing the gripper

In the gripping direction, Mx, high torques can be transferred by the long T-slot guides. The shorter guide ratio in the My direction results in limitations with respect to the gripper finger lengths and their weights. The effect of the resulting torque is that the gripper jaw gets twisted in the guide when it is overloaded and runs along the edge. In the guides, increased wear is to be expected as a result of this line load. This may also lead to chatter during the movement and, in extreme cases, to the gripper getting jammed. As a countermeasure, a maximum gripper finger weight and length have been recorded in the data sheet. The maximum permitted torque that is allowed to act upon the guide when opening and closing the gripper is calculated using the specified maximum gripper finger length and the maximum gripper finger weight.

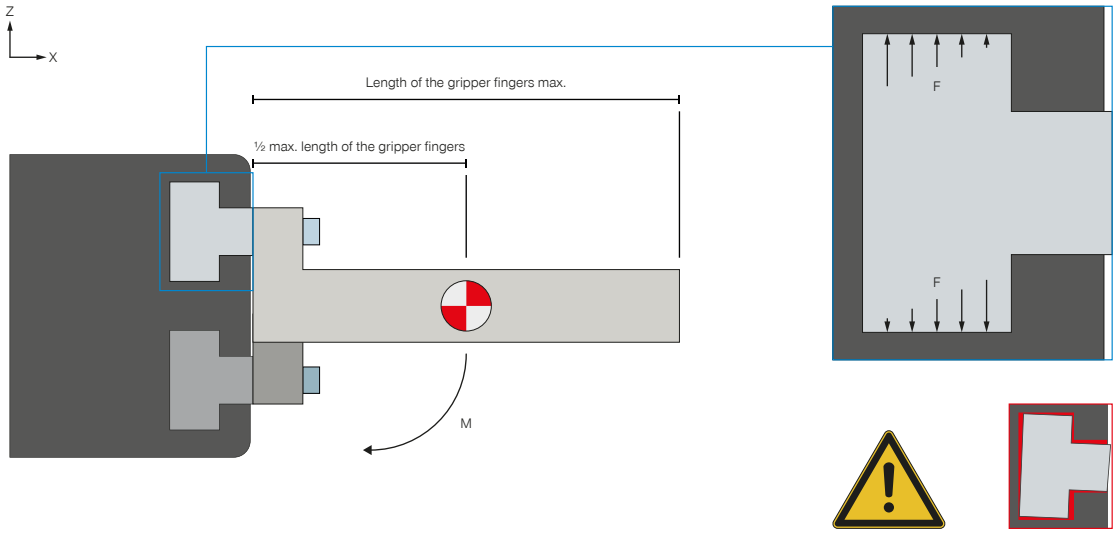

Mmax= ½ max. length of the gripper fingers * max. dead weight, mounted gripper finger * g

Horizontal alignment

To calculate the torque, the center of force is placed at the halfway point of the maximum gripper finger length and multiplied by the maximum gripper finger weight.

DEAD WEIGHT OF MOUNTED GRIPPER FINGER

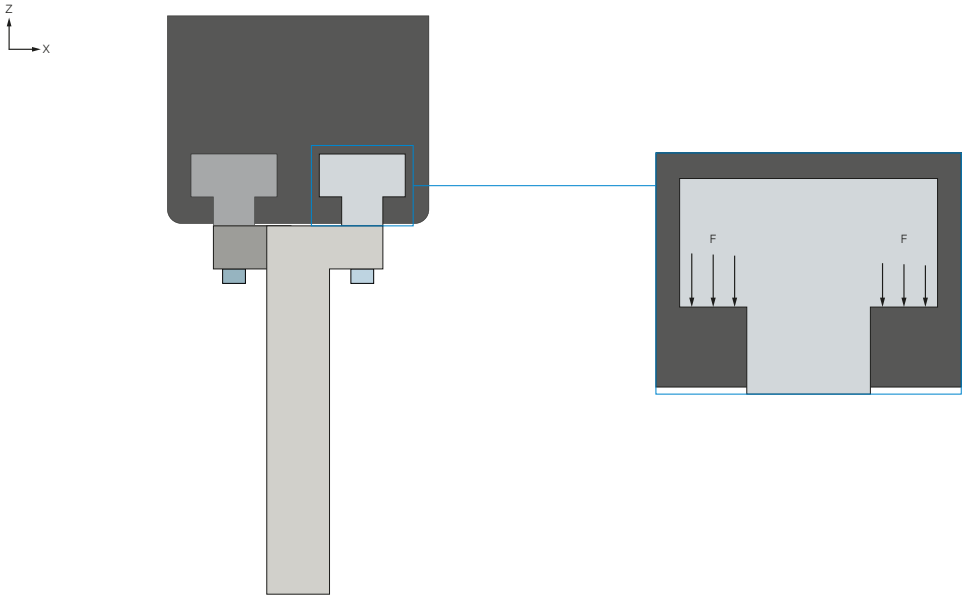

Vertical alignment

If the gripper fingers are aligned vertically during the gripping process, the gripper finger weight is negligible. The maximum permitted torques are typically not reached in this gripping situation. In this case, an overload can only be caused by designs in which the gripper fingers jut out a great deal.