2-JAW RADIAL GRIPPER
SERIES GK

▶ PRODUCT ADVANTAGES

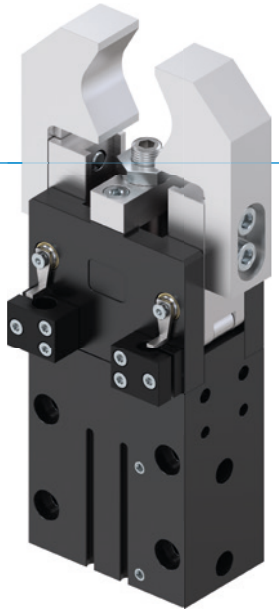

“The compact”

- **Proven technology**

  We have more than 20 years of proven reliability, which ensures uninterrupted production for you

- **Best force/installation space ratio**

  Force transmission using the toggle lever enables high gripping force while optimally utilizing the installation space

- **Smooth stroke configuration**

  You can adjust the 180° opening angle to be unique to your application using an adjusting screw

▶ SERIES CHARACTERISTICS

Installation size	Version	
GKXX	N	NC
Spring closing C		●
10 million maintenance-free cycles (max.)	●	●
Inductive sensor	●	●
Magnetic field sensor	●	●
Self locking mechanism	●	●
IP20	●	●

▶ BENEFITS IN DETAIL

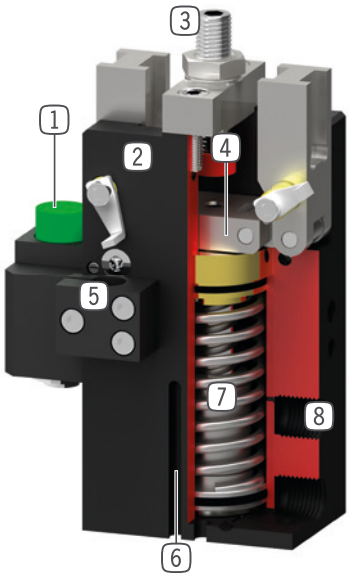

1 **Buffer stop**
- absorption of kinetic energy for heavy and long gripper fingers

2 **Robust, lightweight housing**
- Hard-coated aluminum alloy

3 **Stroke adjustment screw**
- Infinitely adjustable opening stroke

4 **Guided toggle lever mechanism**
- synchronized the movement of the gripper jaws
- mechanically self-locking

5 **Mounting block**
- mounting for inductive proximity switch

6 **Sensing slot**
- mounting and positioning of magnetic field sensors

7 **Integrated gripping force safety device**
- spring integrated into cylinder as energy storage

8 **Energy supply**
- possible from several sides

▶ TECHNICAL DATA

Installation size	Stroke [°]	Gripping force [N]	Weight [kg]	IP class
GK15	90	70 - 100	0,1 - 0,12	IP20
GK20	90	150 - 210	0,23 - 0,3	IP20
GK25	90	440 - 610	0,42 - 0,58	IP20
GK35	90	950 - 1250	0,9 - 1,2	IP20
GK40	90	1400 - 1820	1,7 - 2,2	IP20
GK50	90	3500 - 4250	3,5 - 4,1	IP20

▶ FURTHER INFORMATION IS AVAILABLE ONLINE

All information just a click away at: www.zimmer-group.com. Find data, illustrations, 3D models and operating instructions for your installation size using the order number for your desired product. Quick, clear and always up-to-date.

2-JAW RADIAL GRIPPER
INSTALLATION SIZE GK50

▶ PRODUCT SPECIFICATIONS

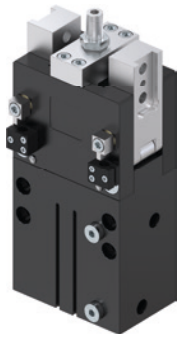

▶ Gripping force diagram

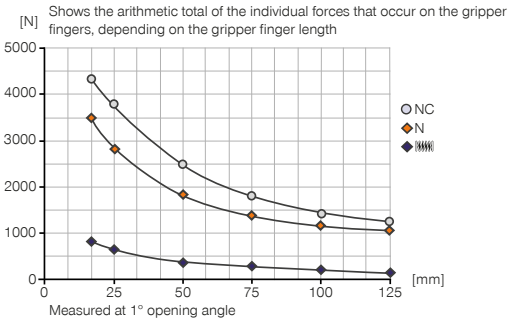

▶ Forces and moments

Displays static forces and moments that can also have an effect, besides the gripping force.

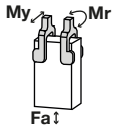

Mr [Nm]	28
My [Nm]	40
Fa [N]	800

▶ INCLUDED IN DELIVERY

2 [piece]
Mounting block
KB8K

▶ RECOMMENDED ACCESSORIES

ENERGY SUPPLY

GV1-8X8
Straight Fittings - Quick Connect Style

DRV1-8X6
Flow Control Valves - with Swivel joint

SENSORS

NJ8-E2
Inductive proximity switch - Cable 5 m

NJ8-E2S
Inductive proximity switch – M8

MFS01-S-KHC-P1-PNP
Magnetic field sensor angled, cable 0.3 m - M8 connector

SENSORS

MFS02-S-KHC-P1-PNP
Magnetic field sensor straight, cable 0.3 m - M8 connector

CONNECTIONS / OTHER

KAG500
Plug-in connector Straight Cable 5m - female connector M8

KAW500
Plug-in connector Angled Cable 5m - female connector M8

S8-G-3
Plug-in connector customizable Straight - male connector M8

ZE30H7X6
Centering Disc

	► Technical data	
Order no.	**GK50N-B**	**GK50NC-B**
Stroke per jaw [°]	90	90
Gripping moment in closing [Nm]	150	183
Gripping moment secured by spring min. [Nm]		33
Gripping force in closing [N]*	3500	4250
Closing time [s]	0.4	0.5
Opening time [s]	0.4	0.5
Repetition accuracy +/- [mm]	0.05	0.05
Operating pressure min. [bar]	3	5
Operating pressure max. [bar]	8	8
Nominal operating pressure [bar]	6	6
Operating temperature min. [°C]	5	5
Operating temperature max. [°C]	+80	+80
Air volume per cycle [cm³]	160	200
Certifications	LABS / REACH / RoHS	LABS / REACH / RoHS
Protection to IEC 60529	IP20	IP20
Weight [kg]	3.4	4.1

*Measured from top edge of housing

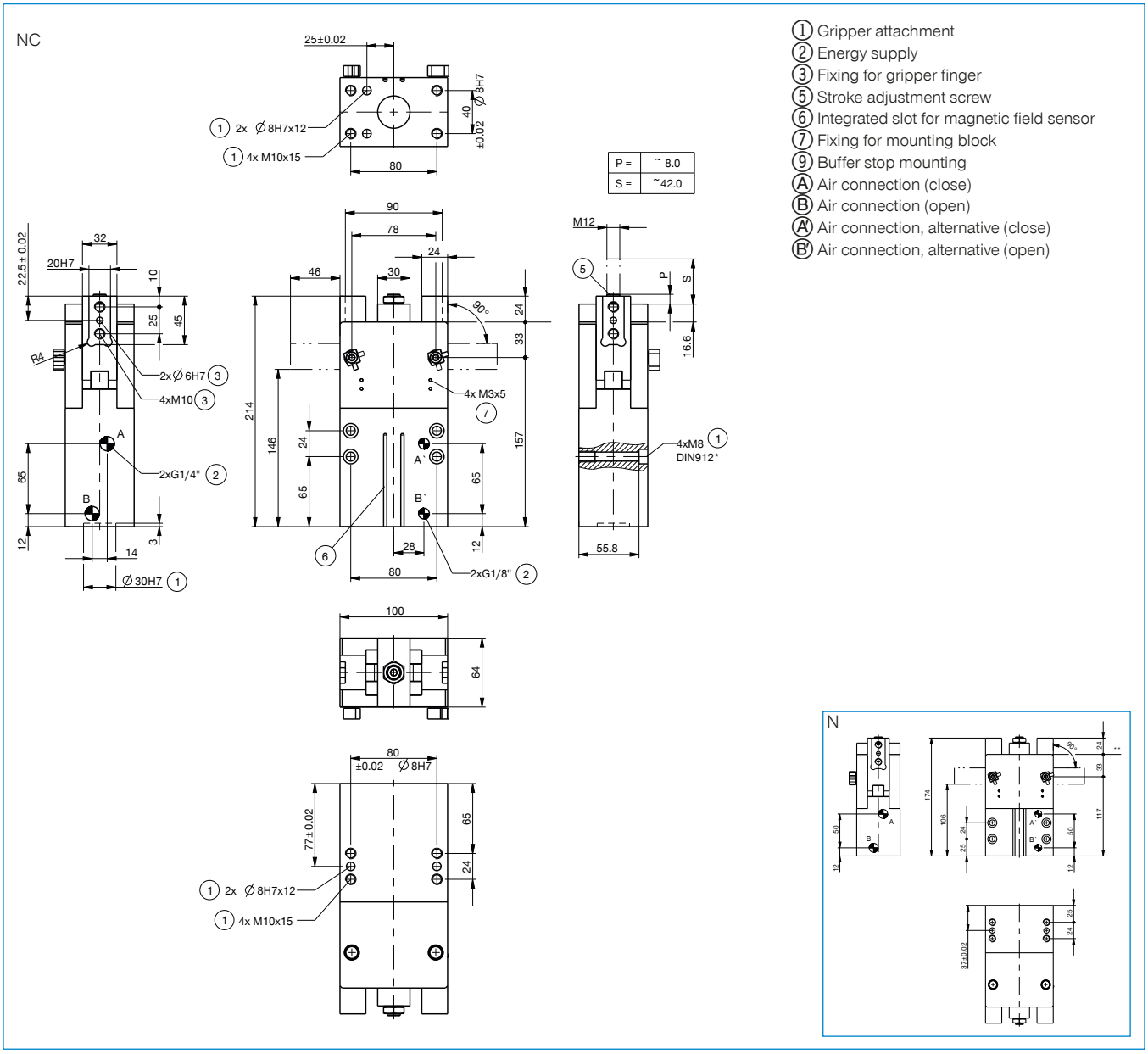

1 Gripper attachment
2 Energy supply
3 Fixing for gripper finger
5 Stroke adjustment screw
6 Integrated slot for magnetic field sensor
7 Fixing for mounting block
9 Buffer stop mounting
A Air connection (close)
B Air connection (open)
A' Air connection, alternative (close)
B' Air connection, alternative (open)

2-JAW RADIAL GRIPPERS
SERIES GK FUNCTIONAL DESCRIPTION

GRIPPING COMPONENTS

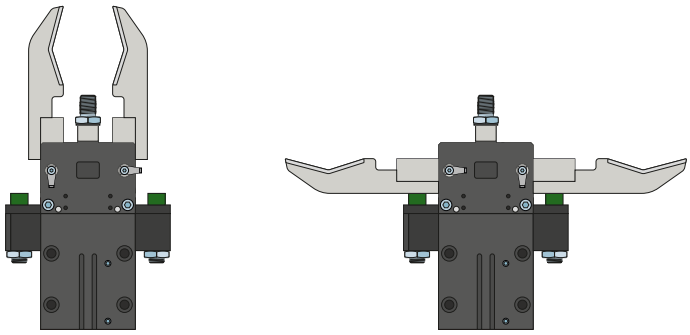

Buffer stop – PB

Absorption of kinetic energy for heavy and long gripper fingers

The buffer stops are used primarily for fast, unthrottled jaw movements. They are equally suitable for long gripper fingers, high jaw mass and for cycle time optimization. The energy is absorbed by an elastomer damper.

ENERGY SUPPLY

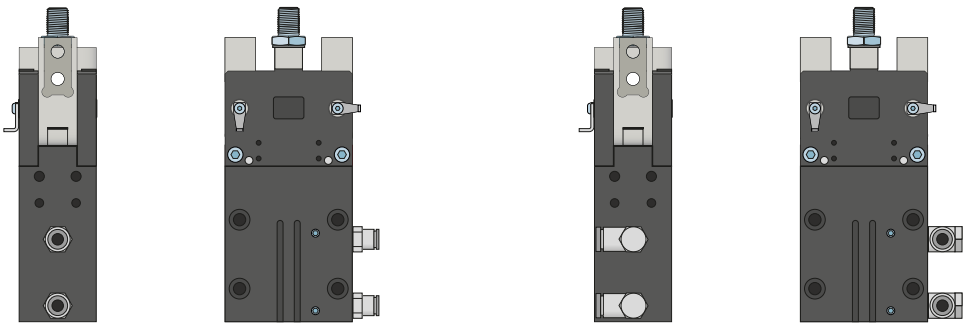

Pneumatic threaded connections

Available in straight and angled design. Can be chosen freely depending on the space conditions or installation situation.

SENSORS

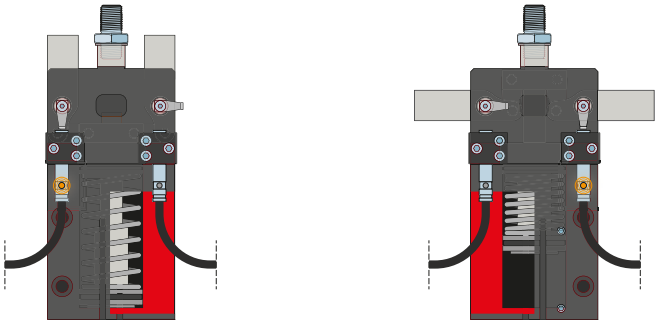

Inductive sensors – NJ

The mounting block is aligned to the cam switch, and the sensor is guided into the mounting block until the required switching distance to the cam switch is reached. Fine adjustment can be made by moving the mounting block again. The sensors are available in versions with 5 m cables with exposed leads and 0,3 m cable with male connector, as well as with direct male connector orientation.

2-JAW RADIAL GRIPPERS
SERIES GK FUNCTIONAL DESCRIPTION

SENSORS

MFS02

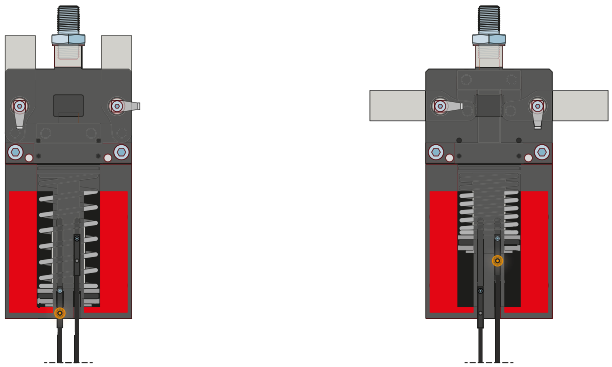

MFS01

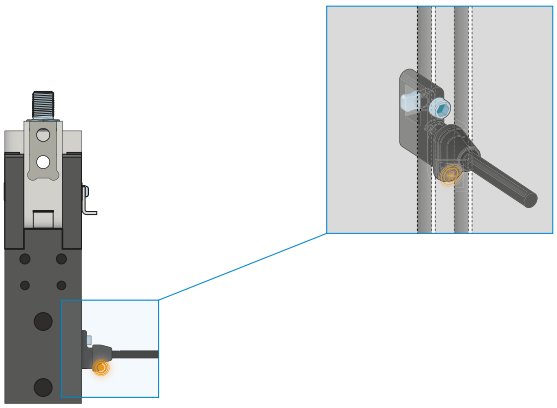

1-point magnetic field sensors – MFS

For non-contact sensing of the piston position

These sensors are installed in the C-groove of the gripper and detect the magnet attached to the piston of the gripper. To ensure use in a wide variety of space conditions, the sensors are available in two variants. While the horizontal MFS02, with straight cable outlet, disappears into the C-groove of the gripper almost completely, the vertical MFS01 is taller, but has a cable outlet that is offset at an angle of 90°. The variants are available in versions with 5 m cables with exposed leads and 0,3 m cable with connector.

SENSORS

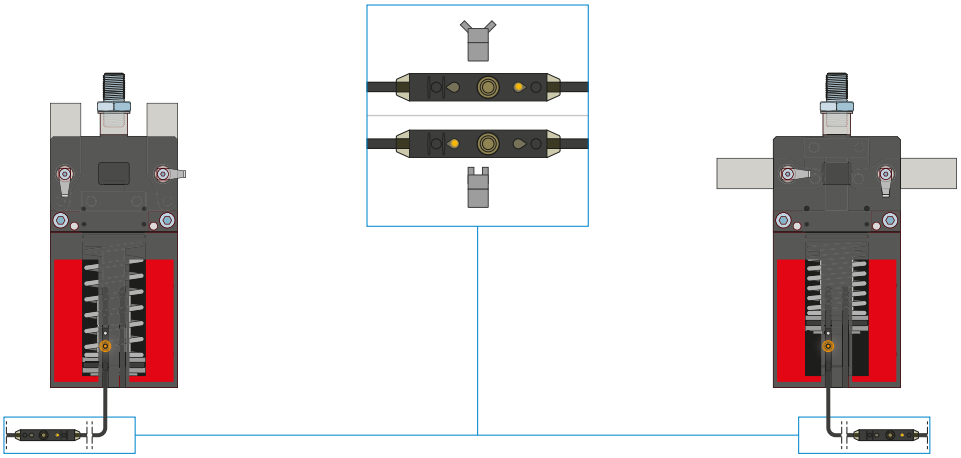

2-point magnetic field sensors – MFS

With two freely programmable switching points

Using the programming unit integrated in the cable, two switch points can be freely defined for this sensor. To do so, the sensor is clamped in the C-groove, the gripper approaches position one and the position is taught in using the teach button. Afterwards, the second position is approached with the gripper and programmed. To ensure use in a wide variety of space conditions, the sensors are available in two variants. While the horizontal MFS02, with straight cable outlet, disappears into the C-groove of the gripper almost completely, the vertical MFS01 is taller, but has a cable outlet that is offset at an angle of 90°. The sensors are available in versions with 5 m cables with exposed leads and 0,3 m cable with connector.

CONNECTIONS / OTHER

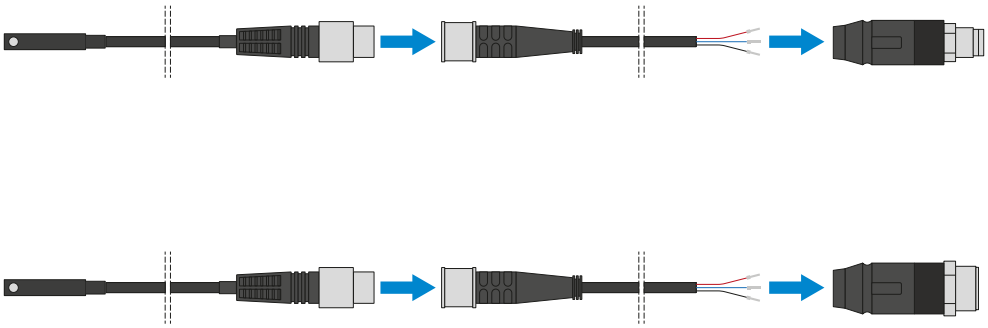

Plug-in connectors

For extending and fabricating the connection lines for the sensors

Cables with a length of 5 m with exposed leads are available. Depending on the specific needs, the cables can be shortened or fabricated with connectors in sizes M8 and M12.

CONNECTIONS / OTHER

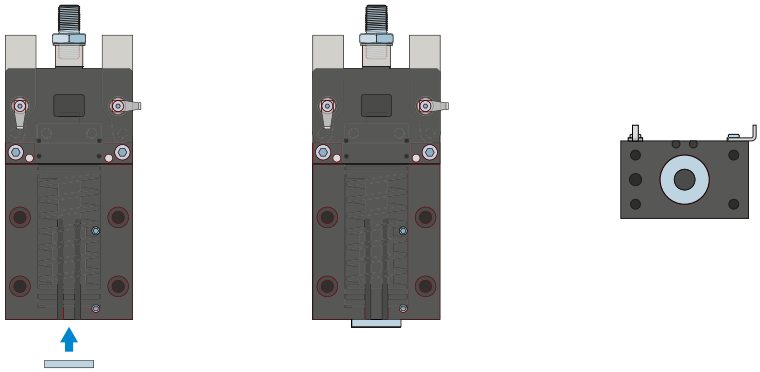

Centering disk

Is required in connection with an alignment pin to define the position of the gripper.