2-JAW PARALLEL GRIPPERS
SERIES GP200

▶ PRODUCT ADVANTAGES

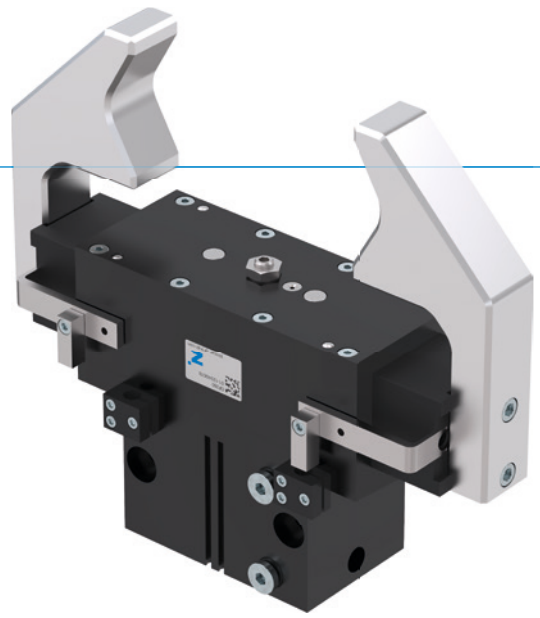

“The variable”

- **Smooth stroke configuration**

  An adjusting screw allows you to adjust the stroke to your specific application

- **Proven technology**

  We have more than 20 years of proven reliability, which ensures uninterrupted production for you

- **Dirt protection**

  Using the scrapers on the guides, you can reliably use the gripper even under the harshest conditions

▶ SERIES CHARACTERISTICS

Installation size	Version			
GP2XX	-	-99	S	S-99
Spring closing C	●		●	
High-strength S			●	●
10 million maintenance-free cycles (max.)	●	●	●	●
Inductive sensor	●	●	●	●
Magnetic field sensor	●	●	●	●
Purged air	●	●	●	●
IP40	●	●	●	●

▶ BENEFITS IN DETAIL

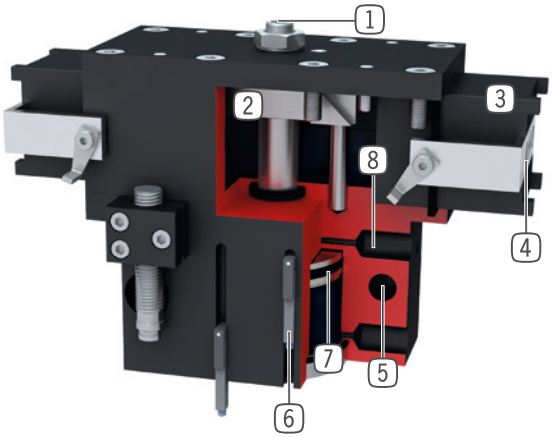

1 **Stroke adjustment**
- infinitely adjustable in „open“ movement
- adjusting screw in delivery

2 **Wedge hook mechanism**
- synchronized the movement of the gripper jaws
- high force transfer

3 **Square guide**
- high forces and moments capacity

4 **Gripper jaw**
- individual gripper finger mounting

5 **Mounting and positioning**
- mounting possible from several sides for versatile positioning

6 **Sensing slot**
- mounting and positioning of magnetic field sensors

7 **Drive**
- double-acting pneumatic cylinder

8 **Energy supply**
- possible from several sides

▶ TECHNICAL DATA

Installation size	Stroke per jaw [mm]	Gripping force [N]	Weight [kg]	IP class
GP224	6 - 12	170 - 335	0,33	IP40
GP240	8 - 20	510 - 1290	1,2	IP40
GP260	10 - 30	800 - 2480	2,9	IP40
GP280	15 - 40	1690 - 4500	8,3	IP40

▶ FURTHER INFORMATION IS AVAILABLE ONLINE

All information just a click away at: www.zimmer-group.com. Find data, illustrations, 3D models and operating instructions for your installation size using the order number for your desired product. Quick, clear and always up-to-date.

2-JAW PARALLEL GRIPPERS
INSTALLATION SIZE GP240

▶ PRODUCT SPECIFICATIONS

▶ Gripping force diagram

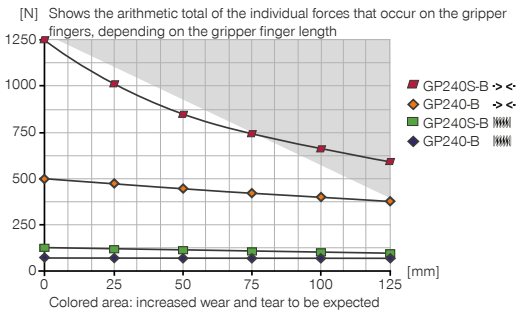

▶ Forces and moments

Displays static forces and moments that can also have an effect, besides the gripping force.

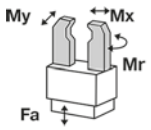

Mr [Nm]	15
Mx [Nm]	30
My [Nm]	15
Fa [N]	400

▶ INCLUDED IN DELIVERY

2 [piece]
Mounting block
KB8K

▶ RECOMMENDED ACCESSORIES

ENERGY SUPPLY

GVM5
Straight Fittings - Quick Connect Style

WVM5
Angled Fittings - Quick Connect Style

DEV04
Quick Exhaust Valve

DSV1-8E
Pressure safety valve with quick exhaust

SENSORS

NJ8-E2S
Inductive proximity switch – M8

MFS01-S-KHC-P1-PNP
Magnetic field sensor angled, cable 0.3 m - M8 connector

SENSORS

MFS02-S-KHC-P1-PNP
Magnetic field sensor straight, cable 0.3 m - M8 connector

MFS01-S-KHC-P2-PNP
2-point sensor angled, cable 0.3 m - M8 connector

MFS02-S-KHC-P2-PNP
2-point sensor straight, cable 0.3 m - M8 connector

MFS02-S-KHC-IL
Straight position sensor, cable 0.3 m – M8 plug

CONNECTIONS / OTHER

KAG500
Plug-in connector Straight Cable 5m - female connector M8

ZE30H7X4
Centering Disc

	► Technical data			
Order no.	**GP240-B**	**GP240-B-99**	**GP240S-B**	**GP240S-B-99**
Stroke per jaw [mm]	20	20	8	8
Gripping force in closing [N]	510	435	1290	1105
Gripping force in opening [N]		435		1105
Gripping force secured by spring min. [N]	75		185	
Closing time [s]	0.1	0.08	0.1	0.08
Opening time [s]	0.1	0.08	0.1	0.08
Repetition accuracy +/- [mm]	0.05	0.05	0.05	0.05
Operating pressure min. [bar]	5	3	5	3
Operating pressure max. [bar]	8	8	8	8
Nominal operating pressure [bar]	6	6	6	6
Operating temperature min. [°C]	+5	+5	+5	+5
Operating temperature max. [°C]	+80	+80	+80	+80
Air volume per cycle [cm³]	49	49	49	49
Certifications	LABS / REACH / RoHS	LABS / REACH / RoHS	LABS / REACH / RoHS	LABS / REACH / RoHS
Protection to IEC 60529	IP40	IP40	IP40	IP40
Weight [kg]	1.3	1.2	1.2	1.2

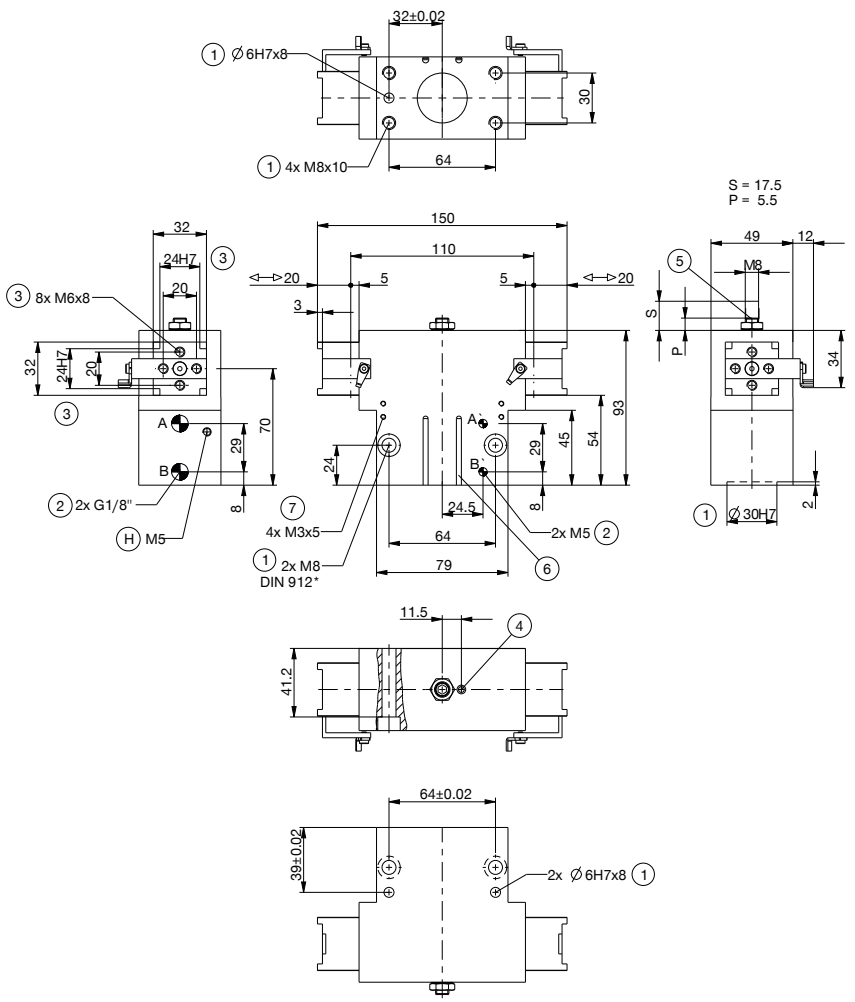
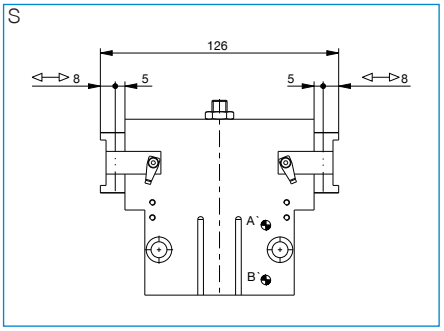
1 Gripper attachment
2 Energy supply
3 Fixing for gripper finger
4 Lubrication nipple
5 Stroke adjustment screw
6 Integrated slot for magnetic field sensor
7 Fixing for mounting block
A Air connection (close)
B Air connection (open)
A' Air connection, alternative (close)
B' Air connection, alternative (open)
H Jaw ventilation port - do not plug