2-JAW PARALLEL GRIPPERS
SERIES GP400

▶ PRODUCT ADVANTAGES

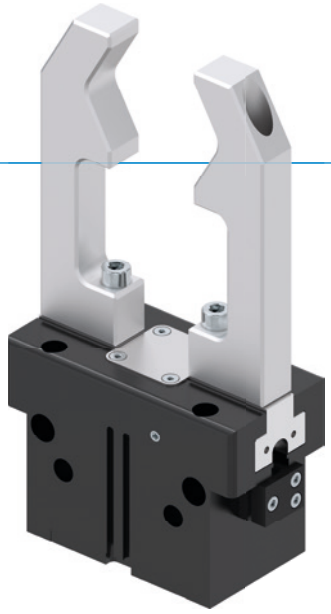

“The economical”

- **Concentration on the essentials**

  The most economic type of gripping: This is how you reduce your production costs

- **Proven T slot guide**

  This established and proven guiding technology stands for the highest process reliability like no other

- **Compact structure**

  Reduces the interference contours for your application

▶ SERIES CHARACTERISTICS

Installation size	Version					
GP4XX	N	NC	NO	S	SC	SO
Spring closing C		●			●	
Spring opening O			●			●
High-strength S				●	●	●
10 million maintenance-free cycles (max.)	●	●	●	●	●	●
Inductive sensor	●	●	●	●	●	●
Magnetic field sensor	●	●	●	●	●	●
Purged air	●	●	●	●	●	●
IP40	●	●	●	●	●	●

▶ BENEFITS IN DETAIL

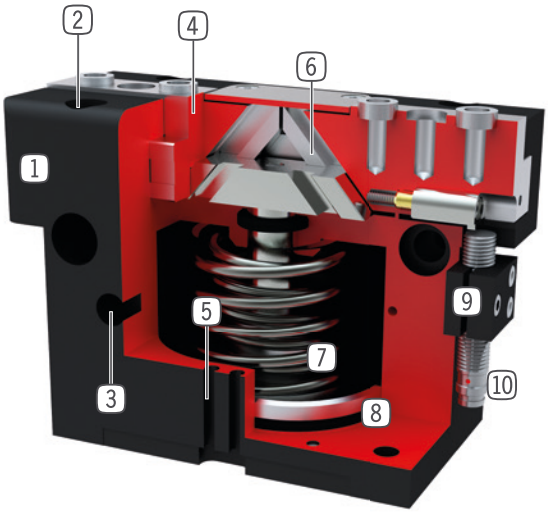

1 **Robust, lightweight housing**
- Hard-coated aluminum alloy

2 **Mounting and positioning**
- mounting possible from several sides for versatile positioning

3 **Energy supply**
- possible from several sides

4 **Gripper jaw**
- individual gripper finger mounting

5 **Sensing slot**
- mounting and positioning of magnetic field sensors

6 **Wedge hook mechanism**
- synchronized the movement of the gripper jaws

7 **Integrated gripping force safety device**
- spring integrated into cylinder as energy storage

8 **Position sensing**
- permanent magnet for direct monitoring of piston movement

9 **Mounting block**
- mounting for inductive proximity switch (10)

▶ TECHNICAL DATA

Installation size	Stroke per jaw [mm]	Gripping force [N]	Weight [kg]	IP class
GP403	3	85 - 115	0,08 - 0,1	IP40
GP404	2 - 4	170 - 500	0,14 - 0,16	IP40
GP406	3 - 6	300 - 950	0,27 - 0,32	IP40
GP408	4 - 8	550 - 1660	0,5 - 0,57	IP40
GP410	5 - 10	740 - 2340	0,85 - 1	IP40
GP412	6 - 12	1290 - 4130	1,5 - 1,78	IP40
GP416	8 - 16	1860 - 5780	2,9 - 3,4	IP40
GP420	10 - 20	3175 - 9400	5,5 - 6,7	IP40
GP430	15 - 30	6675 - 19275	14 -18,9	IP40

▶ FURTHER INFORMATION IS AVAILABLE ONLINE

All information just a click away at: www.zimmer-group.com. Find data, illustrations, 3D models and operating instructions for your installation size using the order number for your desired product. Quick, clear and always up-to-date.

2-JAW PARALLEL GRIPPERS
INSTALLATION SIZE GP408

▶ PRODUCT SPECIFICATIONS

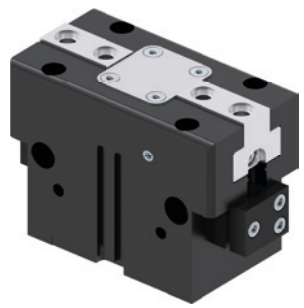

▶ Gripping force diagram

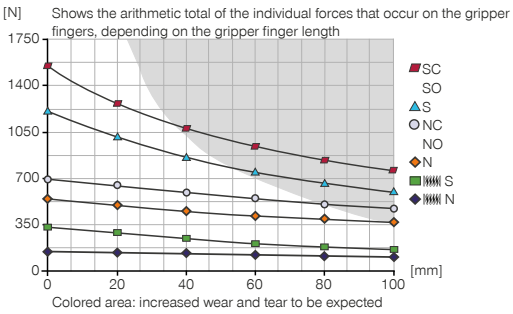

▶ Forces and moments

Displays static forces and moments that can also have an effect, besides the gripping force.

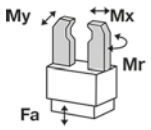

Mr [Nm]	50
Mx [Nm]	80
My [Nm]	60
Fa [N]	1800

▶ INCLUDED IN DELIVERY

2 [piece]
Mounting block
KB8K

4 [piece]
Centering Disc
DST40800

▶ RECOMMENDED ACCESSORIES

GRIPPING COMPONENTS

UB408
Universal jaw set aluminium

UB408ST
Universal jaw set steel

ENERGY SUPPLY

GVM5
Straight Fittings - Quick Connect Style

WVM5
Angled Fittings - Quick Connect Style

SENSORS

NJ8-E2S
Inductive proximity switch – M8

MFS01-S-KHC-P1-PNP
Magnetic field sensor angled, cable 0.3 m - M8 connector

SENSORS

MFS02-S-KHC-P1-PNP
Magnetic field sensor straight, cable 0.3 m - M8 connector

MFS01-S-KHC-P2-PNP
2-point sensor angled, cable 0.3 m - M8 connector

MFS02-S-KHC-P2-PNP
2-point sensor straight, cable 0.3 m - M8 connector

MFS02-S-KHC-IL
Straight position sensor, cable 0.3 m – M8 plug

CONNECTIONS / OTHER

KAG500
Plug-in connector Straight Cable 5m - female connector M8

WFR02
Angle flange

	► Technical data					
Order no.	**GP408N-C**	**GP408NC-C**	**GP408NO-C**	**GP408S-C**	**GP408SC-C**	**GP408SO-C**
Stroke per jaw [mm]	8	8	8	4	4	4
Gripping force in closing [N]	550	700		1230	1570	
Gripping force in opening [N]	590		740	1320		1660
Gripping force secured by spring min. [N]		150	150		340	340
Closing time [s]	0.04	0.03	0.05	0.04	0.03	0.05
Opening time [s]	0.04	0.05	0.03	0.04	0.05	0.03
Repetition accuracy +/- [mm]	0.01	0.01	0.01	0.01	0.01	0.01
Operating pressure [bar]	3 ... 8	4 ... 8	4 ... 8	3 ... 8	4 ... 8	4 ... 8
Nominal operating pressure [bar]	6	6	6	6	6	6
Max. operating pressure for sealing air [bar]	0.5	0.5	0.5	0.5	0.5	0.5
Operating temperature [°C]	+5 ... +80	+5 ... +80	+5 ... +80	+5 ... +80	+5 ... +80	+5 ... +80
Air volume per cycle [cm³]	24	36	36	24	36	36
Certifications	LABS / REACH / RoHS	LABS / REACH / RoHS	LABS / REACH / RoHS	LABS / REACH / RoHS	LABS / REACH / RoHS	LABS / REACH / RoHS
Protection to IEC 60529	IP40	IP40	IP40	IP40	IP40	IP40
Weight [kg]	0.46	0.52	0.52	0.48	0.52	0.52

NC / NO / SC / SO

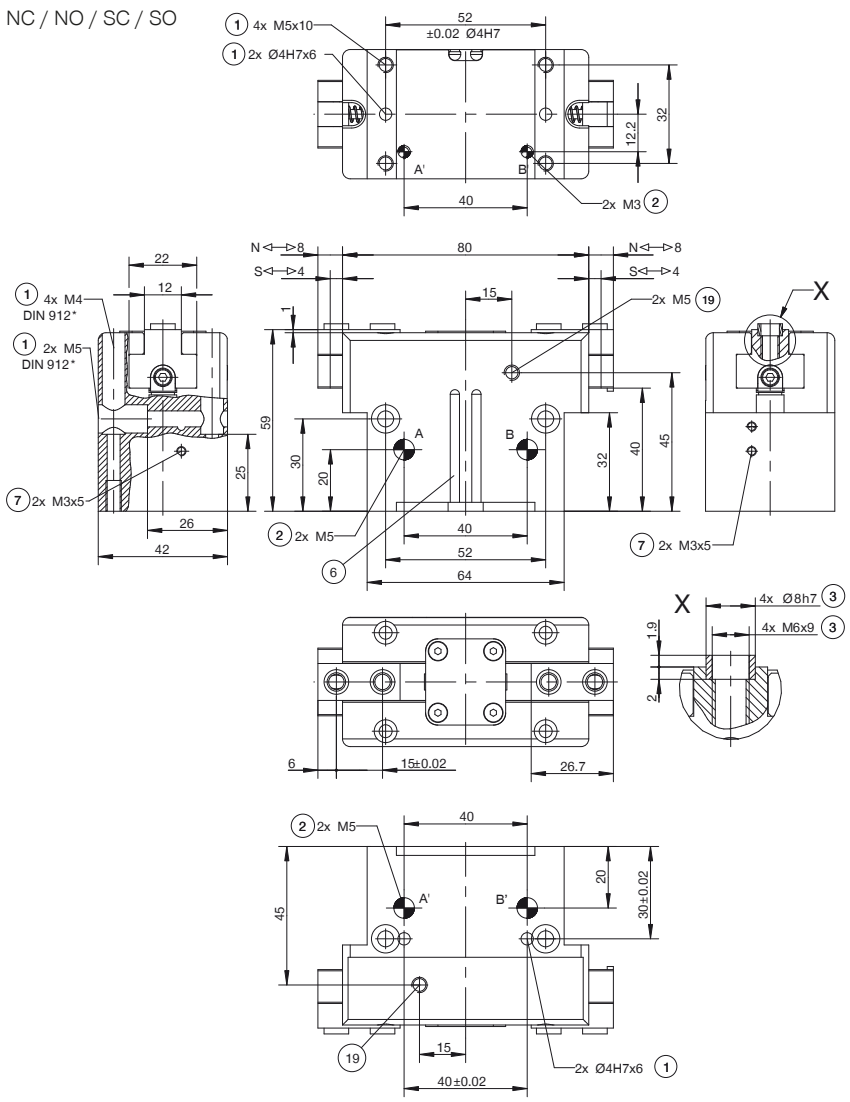

1 Gripper attachment
2 Energy supply
3 Fixing for gripper finger
6 Integrated slot for magnetic field sensor
7 Fixing for mounting block
19 Air purge connection option
38 Adapter
39 Gripper
A Air connection (close)
B Air connection (open)
A' Air connection, alternative (close)
B' Air connection, alternative (open)

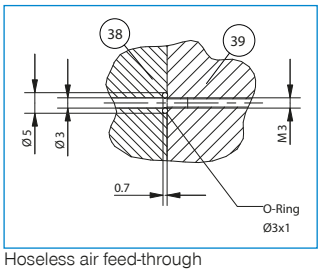

Hoseless air feed-through

N / S

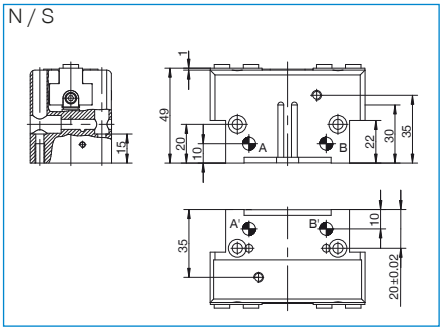

2-JAW PARALLEL GRIPPERS
SERIES GP400 FUNCTIONAL DESCRIPTION

GRIPPING COMPONENTS

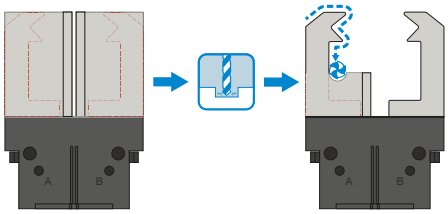

Universal jaws – UB400

Can be used immediately or for individual reprocessing

The gripper blanks are available in an aluminum (AL) and also in a steel (ST) version and are installed directly on the gripper using the screws in the scope of delivery. The fits for the centering sleeves are already in place for this purpose. One universal jaw set is required for each gripper.

ENERGY SUPPLY

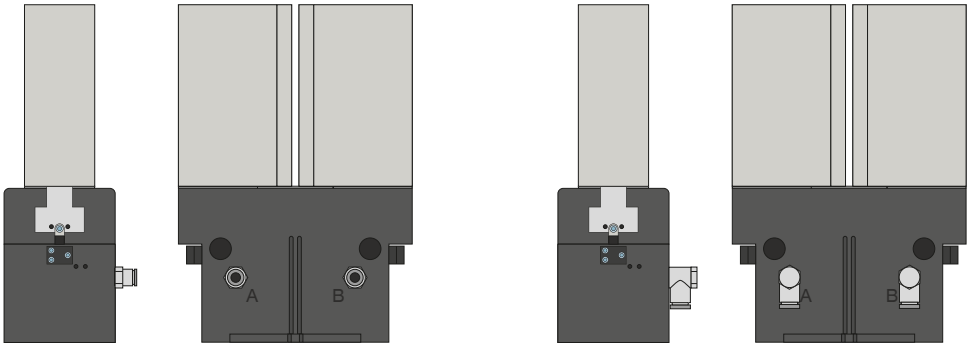

Pneumatic threaded connections

Available in straight and angled design. Can be chosen freely depending on the space conditions or installation situation.

ENERGY SUPPLY

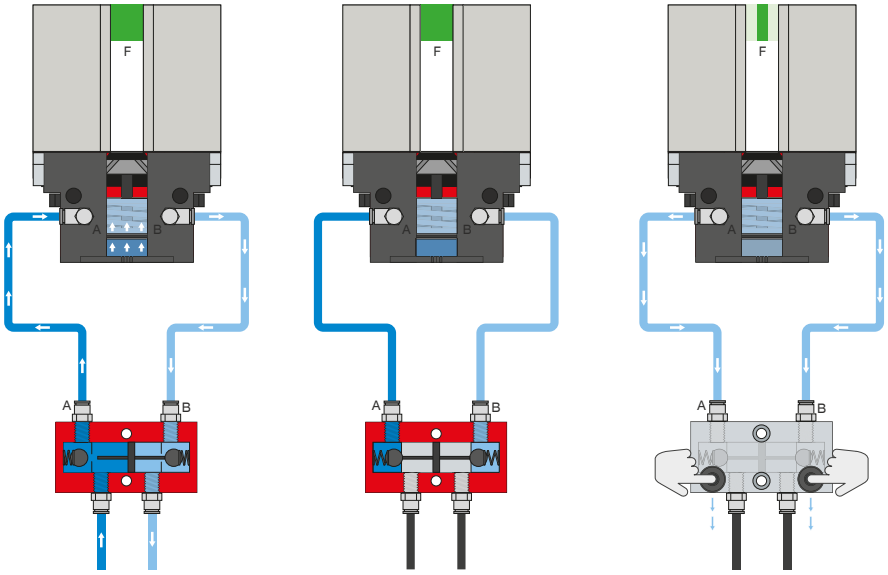

Pressure safety valve – DSV

Ensures safe retention of force and position if the system pressure drops

The integrated double check valve, which can be unlocked, retains the system pressure of the gripper in case of EMERGENCY STOP. To ensure the function, the valve must be installed as close to the gripper's air connection as possible. In variant E, two pushbuttons are installed that allow for controlled bleeding of the gripper.

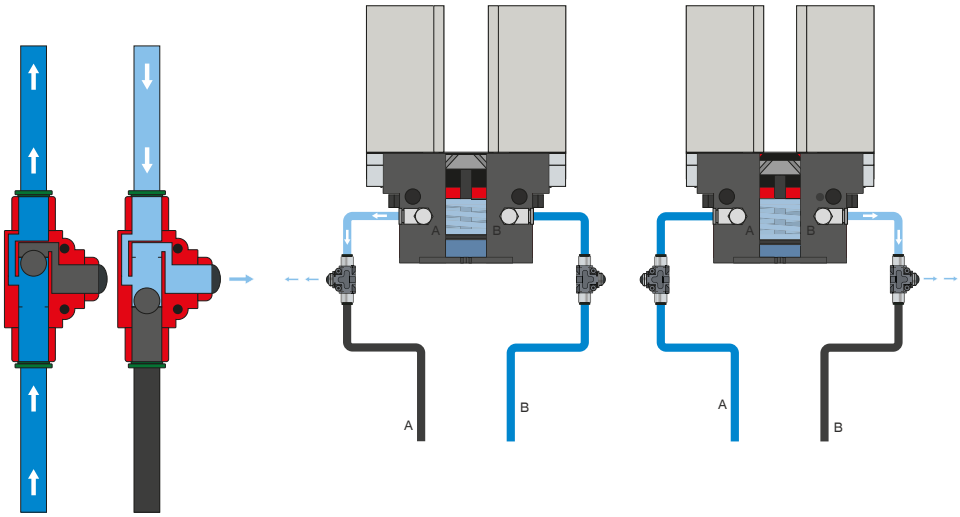

Quick exhaust valve – DEV

For rapid bleeding of the compressed air and preventing back pressure

The inline valves make a faster cycle time possible and prevent the formation of condensate in grippers with a small cylinder volume. To ensure the function, the valve must be installed as close to the gripper's air connection as possible.

SENSORS

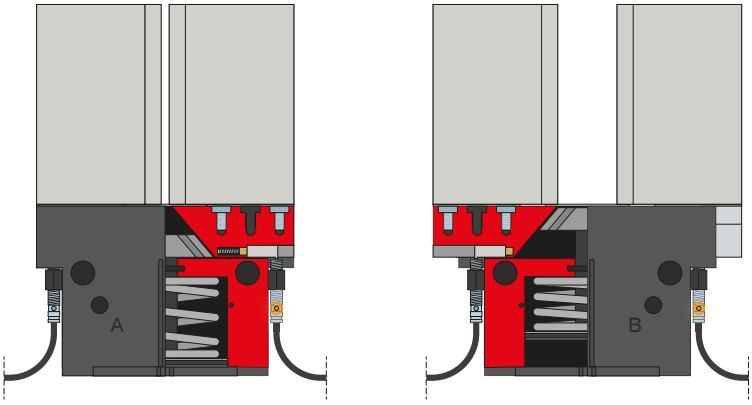

Inductive sensors – NJ

The sensor is inserted into the mounting block as far as it will go and secured. Tuning to the desired position then takes place by adjusting the cam switch. The sensors are available in versions with 5 m cables with exposed leads and 0,3 m cable with male connector, as well as with direct male connector orientation.

SENSORS

MFS02

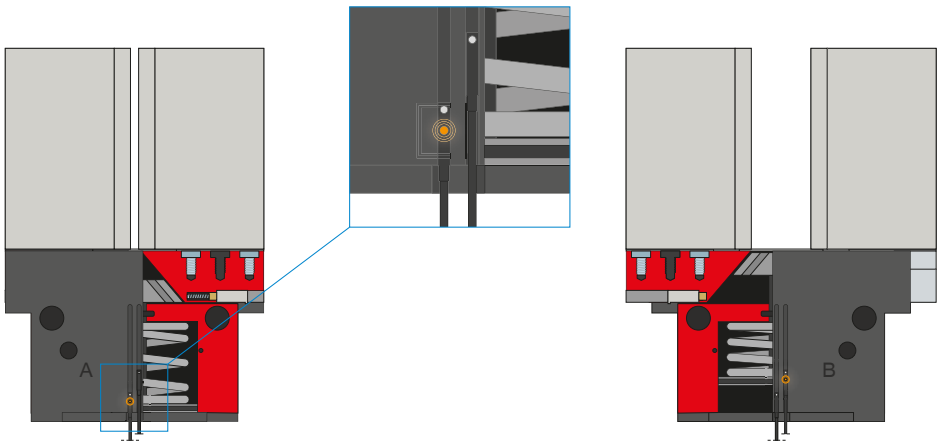

MFS01

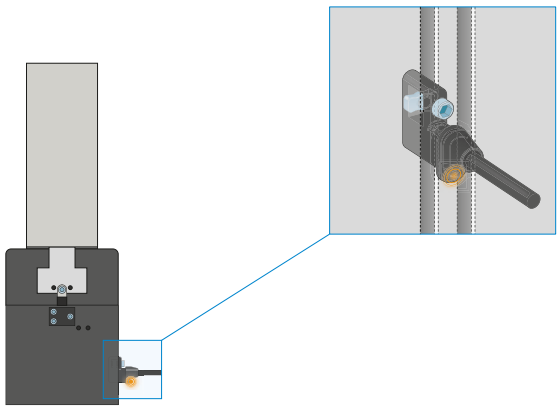

1-point magnetic field sensors – MFS

For non-contact sensing of the piston position

These sensors are installed in the C-groove of the gripper and detect the magnet attached to the piston of the gripper. To ensure use in a wide variety of space conditions, the sensors are available in two variants. While the horizontal MFS02, with straight cable outlet, disappears into the C-groove of the gripper almost completely, the vertical MFS01 is taller, but has a cable outlet that is offset at an angle of 90°. The variants are available in versions with 5 m cables with exposed leads and 0,3 m cable with connector.

SENSORS

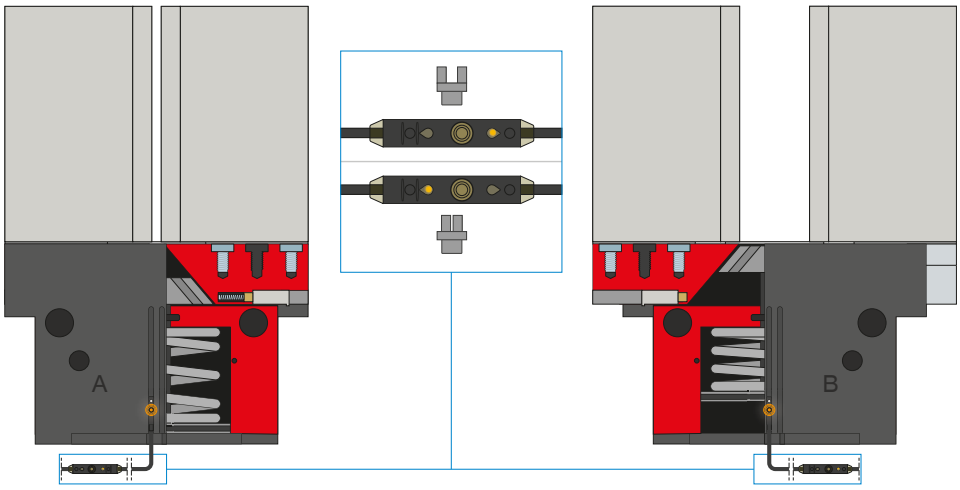

2-point magnetic field sensors – MFS

With two freely programmable switching points

Using the programming unit integrated in the cable, two switch points can be freely defined for this sensor. To do so, the sensor is clamped in the C-groove, the gripper approaches position one and the position is taught in using the teach button. Afterwards, the second position is approached with the gripper and programmed. To ensure use in a wide variety of space conditions, the sensors are available in two variants. While the horizontal MFS02, with straight cable outlet, disappears into the C-groove of the gripper almost completely, the vertical MFS01 is taller, but has a cable outlet that is offset at an angle of 90°. The sensors are available in versions with 5 m cables with exposed leads and 0,3 m cable with connector.

CONNECTIONS / OTHER

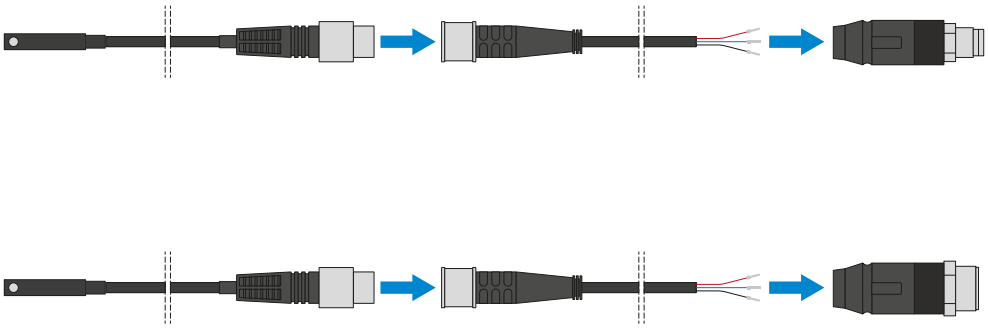

Plug-in connectors

For extending and fabricating the connection lines for the sensors

Cables with a length of 5 m with exposed leads are available. Depending on the specific needs, the cables can be shortened or fabricated with connectors in sizes M8 and M12.

CONNECTIONS / OTHER

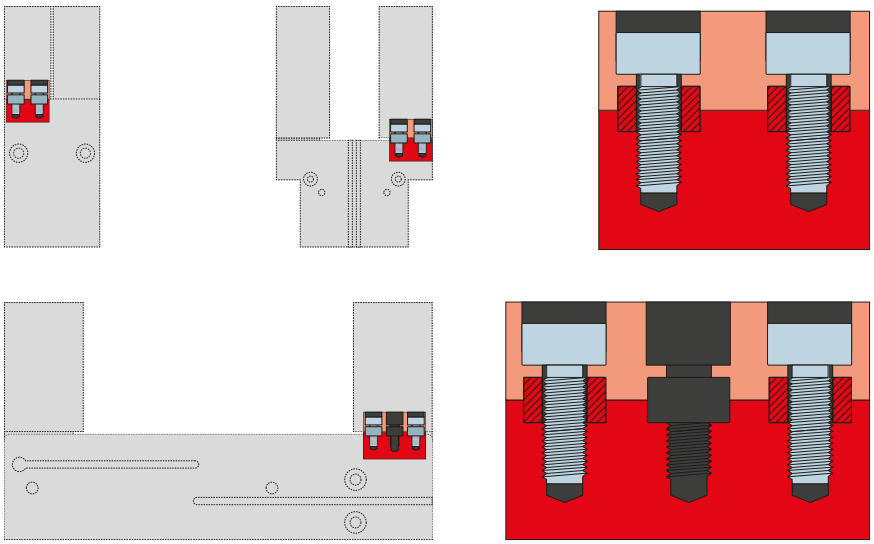

Centering sleeves

For defined position measurement of the gripper fingers

The centering sleeves are inserted into the fits of the gripper jaws to define the position of the gripper fingers. The centering sleeves are comparable to a pin connection.