# 3-JAW CONCENTRIC GRIPPERS
## SERIES GPD5000

### ▶ PRODUCT ADVANTAGES

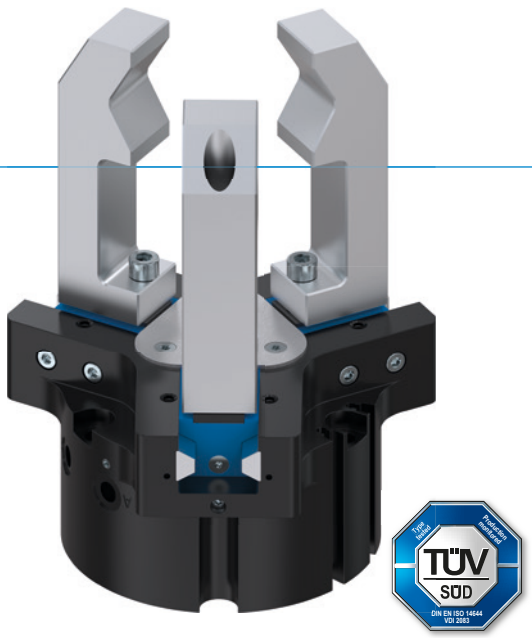


**"The best"**

▶ **Steel Linear Guide –**
**The superior guidance system concept**

The steel / steel guide stands for lasting precision, durability and a long service life—featuring maintenance intervals of up to 30 million gripping cycles. Benefit from these features and increase the profitability and process reliability of your machine.

▶ **Leakproof and corrosion protected – The universal gripper**

Suitable for virtually all ambient conditions, with a sealed guide up to IP67 and corrosion protection as standard, you are able to use this gripper universally. As a result, the range of models in your production is reduced, along with a reduction in associated storage and process costs.

▶ **The value promise – Consistent and without fine print**

Rely on the Zimmer Group and benefit from an exclusive 24-month warranty for your GPP and GPD5000 grippers – without restrictions, even for parts that come into contact with the workpiece and wear parts. Maximum reliability, maximum productivity – 24/7!

### ▶ BENEFITS IN DETAIL

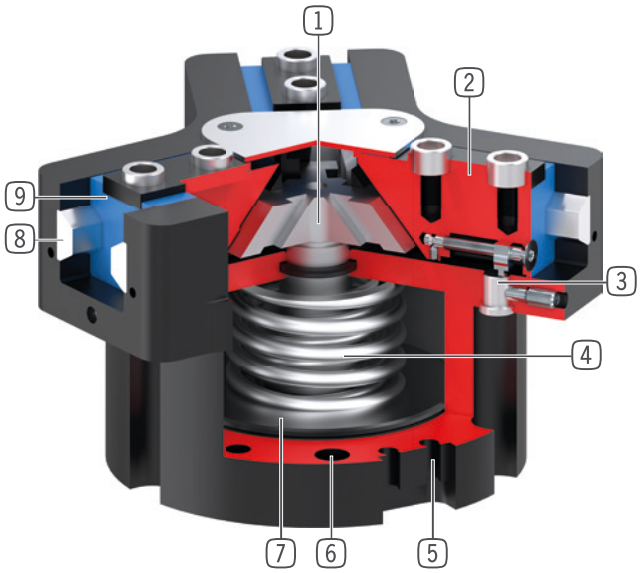


1 **Wedge hook mechanism**
- high forces and moments capacity
- Synchronized gripper jaw movement

2 **Gripper jaw**
- Gripper fingers mounted using removable centering sleeves
- Lubricated for life via incorporated lubrication slots

3 **Mounting block**
- mounting for inductive proximity switch

4 **Integrated gripping force safety device**
- Spring built into cylinder chamber as an energy store

5 **Sensing slot**
- mounting and positioning of magnetic field sensors

6 **Mounting and positioning**
- Alternatively, on several sides for customized mounting
- Pneumatic and electrical versions identical apart from height

7 **Drive**
- Double-acting pneumatic rotor cylinder

8 **Steel Linear Guide**
- Steel in steel guide
- Enables use of extremely long gripper fingers

9 **Dual lip seal**
- IP64 and up to IP67 (with purged air) for Protector version
- Prevents grease from being squeezed out, increasing service life

## ▶ SERIES CHARACTERISTICS

| Installation size | | Variants | | | |
|---|---|---|---|---|---|
| GPD50XX | | -00 | -20 | -21 | -24 |
| N | Long stroke | ● | ● | ● | ● |
| NC | Long stroke / Spring closing | ● | ● | ● | ● |
| NO | Long stroke / Spring opening | ● | ● | ● | ● |
| S | High-strength | ● | ● | ● | ● |
| SC | High-strength / Spring closing | ● | ● | ● | ● |
| SO | High-strength / Spring opening | ● | ● | ● | ● |
| | Steel Linear Guide | ● | ● | ● | ● |
| 30 Mio | 30 million maintenance-free cycles (max.) | ● | ● | ● | ● |
| | Inductive sensor | ● | ● | ● | ● |
| | Magnetic field sensor | ● | ● | ● | ● |
| | Protected against corrosion | ● | ● | ● | ● |
| | Purged air | ● | ● | ● | ● |
| | Temperature-resistant | | ● | | ● |
| | Cleanroom-certified | ● | | ● | |
| IP 64 | IP64 | ● | ● | | |
| IP 67 | IP67* | | | ● | ● |

*with purged air (max. 0,5 bar)

## ▶ TECHNICAL DATA

| Installation size | Stroke per jaw [mm] | Gripping force [N] | Weight [kg] | IP class |
|---|---|---|---|---|
| GPD5003 | 2,5 | 310 - 465 | 0,14 - 0,22 | IP64 / IP67* |
| GPD5004 | 2 - 4 | 460 - 1520 | 0,27 - 0,41 | IP64 / IP67* |
| GPD5006 | 3 - 6 | 740 - 2370 | 0,48 - 0,58 | IP64 / IP67* |
| GPD5008 | 4 - 8 | 1260 - 3910 | 0,83 - 1 | IP64 / IP67* |
| GPD5010 | 5 - 10 | 2290 - 7160 | 1,45 - 1,9 | IP64 / IP67* |
| GPD5013 | 6 - 13 | 3770 - 11450 | 2,6 - 3,7 | IP64 / IP67* |
| GPD5016 | 8 - 16 | 6870 - 20330 | 5,7 - 7,5 | IP64 / IP67* |
| GPD5025 | 14 - 25 | 8430 - 22850 | 11,8 - 15,4 | IP64 / IP67* |
| GPD5030 | 17 - 30 | 12130 - 32400 | 21 - 27,5 | IP64 / IP67* |
| GPD5035 | 20 - 35 | 16600 - 45200 | 37,8 - 42 | IP64 / IP67* |
| GPD5045 | 26 - 45 | 27900 - 72500 | 78,6 - 99,9 | IP64 / IP67* |

*with purged air (max. 0,5 bar)

# 3-JAW CONCENTRIC GRIPPERS
# INSTALLATION SIZE GPD5006

## ▶ PRODUCT SPECIFICATIONS

| -00-A / -20-A / -21-A / -24-A |
|---|
| **Steel / steel guide** |

### ▶ Gripping force diagram

Shows the arithmetic total of the individual forces that occur on the gripper fingers, depending on the gripper finger length

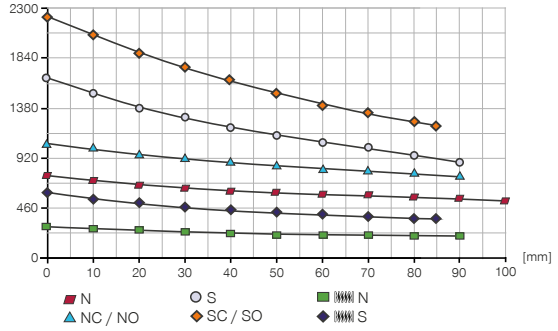


### ▶ Forces and moments

Displays static forces and moments that can also have an effect, besides the gripping force.

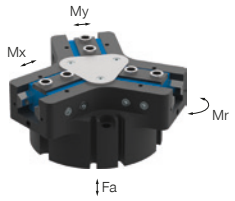


| | |
|---|---|
| Mr [Nm] | 43 |
| Mx [Nm] | 70 |
| My [Nm] | 46 |
| Fa [N] | 1250 |

## ▶ VARIANTS

| -00-A / -20-A | -21-A / -24-A |
|---|---|
| **Steel / steel guide** | **Steel / steel guide** |
| | |
| | |

## ▶ TECHNICAL DATA

| | ▶ Technical data | | | | | |
|---|---|---|---|---|---|---|
| **Order no.** | **GPD5006N-00-A** | **GPD5006NC-00-A** | **GPD5006NO-00-A** | **GPD5006S-00-A** | **GPD5006SC-00-A** | **GPD5006SO-00-A** |
| Stroke per jaw [mm] | 6 | 6 | 6 | 3 | 3 | 3 |
| Gripping force in closing [N] | 740 | 1020 | | 1620 | 2240 | |
| Gripping force in opening [N] | 800 | | 1080 | 1750 | | 2370 |
| Gripping force secured by spring min. [N] | | 280 | 280 | | 620 | 620 |
| Closing time [s] | 0.028 | 0.018 | 0.038 | 0.028 | 0.018 | 0.038 |
| Opening time [s] | 0.028 | 0.038 | 0.018 | 0.028 | 0.038 | 0.018 |
| Dead weight of mounted gripper finger max. [kg] | 0.4 | 0.4 | 0.4 | 0.4 | 0.4 | 0.4 |
| Length of the gripper fingers max. [mm] | 100 | 90 | 90 | 90 | 85 | 85 |
| Repetition accuracy +/- [mm] | 0.01 | 0.01 | 0.01 | 0.01 | 0.01 | 0.01 |
| Operating pressure min. [bar] | 3 | 4 | 4 | 3 | 4 | 4 |
| Operating pressure max. [bar] | 8 | 7 | 7 | 8 | 7 | 7 |
| Nominal operating pressure [bar] | 6 | 6 | 6 | 6 | 6 | 6 |
| Operating temperature [°C] | -10 ... +90 | -10 ... +90 | -10 ... +90 | -10 ... +90 | -10 ... +90 | -10 ... +90 |
| Air volume per cycle [cm³] | 22 | 43 | 43 | 22 | 43 | 43 |
| Clean room applications according to DIN EN ISO 14644-1 | 6 | 6 | 6 | 6 | 6 | 6 |
| Certifications | LABS / REACH / RoHS | LABS / REACH / RoHS | LABS / REACH / RoHS | LABS / REACH / RoHS | LABS / REACH / RoHS | LABS / REACH / RoHS |
| Protection to IEC 60529 | IP64 | IP64 | IP64 | IP64 | IP64 | IP64 |
| Weight [kg] | 0.47 | 0.58 | 0.57 | 0.49 | 0.59 | 0.58 |

| | ▶ Technical Data - High Temperature Version | | | | | |
|---|---|---|---|---|---|---|
| **Order no.** | **GPD5006N-20-A** | **GPD5006NC-20-A** | **GPD5006NO-20-A** | **GPD5006S-20-A** | **GPD5006SC-20-A** | **GPD5006SO-20-A** |
| Operating temperature [°C] | -10 ... +130 | -10 ... +130 | -10 ... +130 | -10 ... +130 | -10 ... +130 | -10 ... +130 |

| | ▶ Technical Data - Protector Version | | | | | |
|---|---|---|---|---|---|---|
| **Order no.** | **GPD5006N-21-A** | **GPD5006NC-21-A** | **GPD5006NO-21-A** | **GPD5006S-21-A** | **GPD5006SC-21-A** | **GPD5006SO-21-A** |
| Clean room applications according to DIN EN ISO 14644-1 | 6 | 6 | 6 | 6 | 6 | 6 |
| Protection to IEC 60529 | IP67* | IP67* | IP67* | IP67* | IP67* | IP67* |
| Weight [kg] | 0.59 | 0.7 | 0.69 | 0.61 | 0.71 | 0.71 |

| | ▶ Technical Data - High Temperature Protector Version | | | | | |
|---|---|---|---|---|---|---|
| **Order no.** | **GPD5006N-24-A** | **GPD5006NC-24-A** | **GPD5006NO-24-A** | **GPD5006S-24-A** | **GPD5006SC-24-A** | **GPD5006SO-24-A** |
| Operating temperature [°C] | -10 ... +130 | -10 ... +130 | -10 ... +130 | -10 ... +130 | -10 ... +130 | -10 ... +130 |
| Protection to IEC 60529 | IP67* | IP67* | IP67* | IP67* | IP67* | IP67* |
| Weight [kg] | 0.59 | 0.7 | 0.69 | 0.61 | 0.71 | 0.71 |

*with purged air (max. 0,5 bar)

# 3-JAW CONCENTRIC GRIPPERS
## INSTALLATION SIZE GPD5006

### ▶ TECHNICAL DRAWINGS

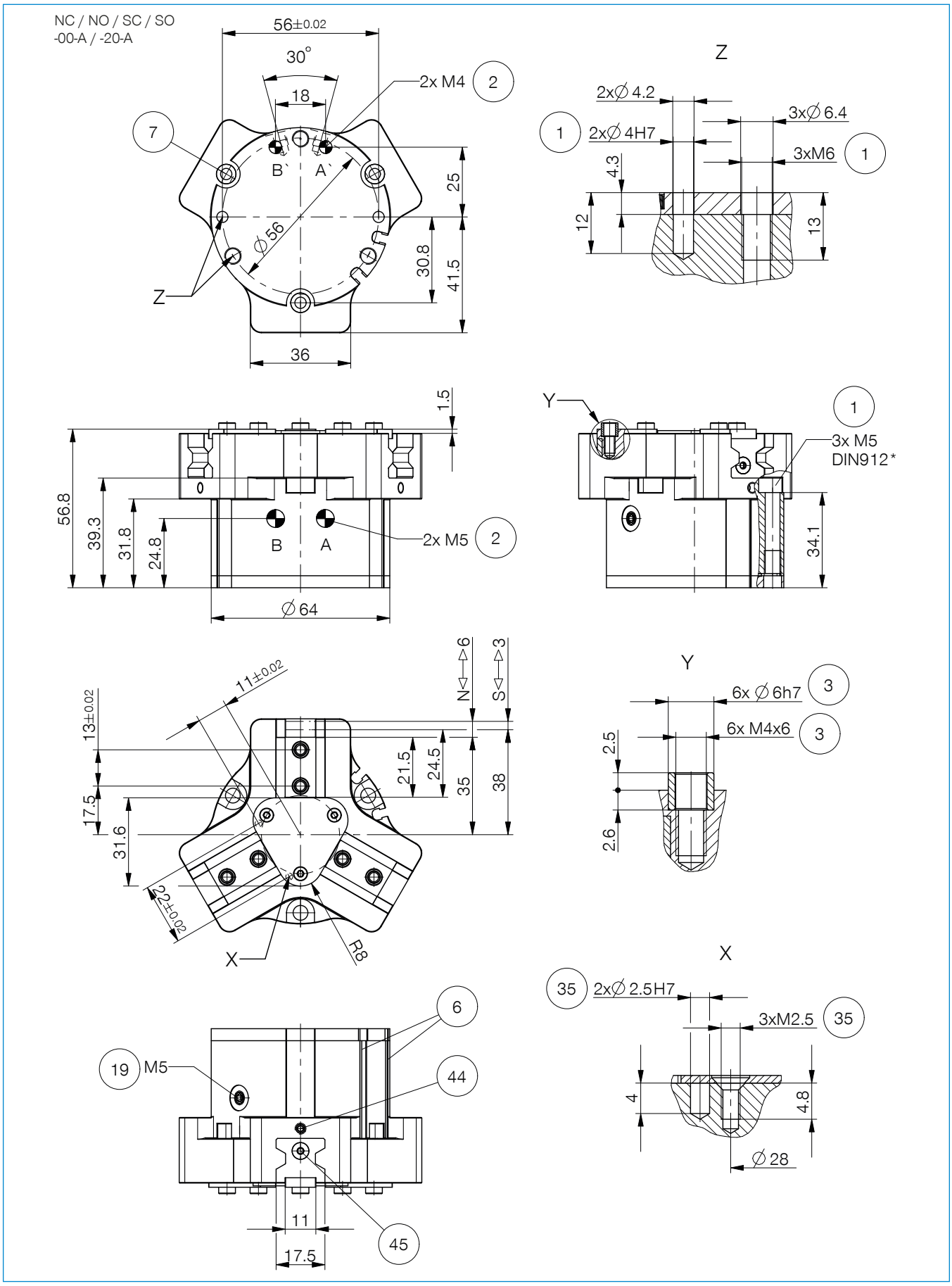

## ▶ TECHNICAL DRAWINGS

N / S
-00-A / -20-A

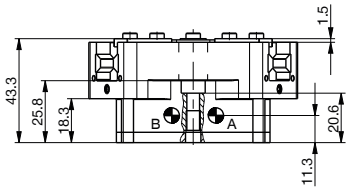


N / NC / NO / S / SC / SO
-21-A / -24-A

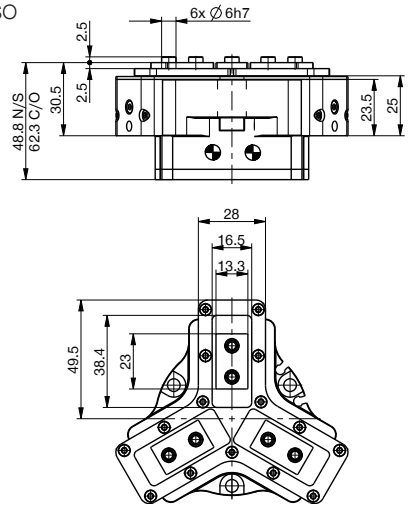


Hoseless air feed-through M4

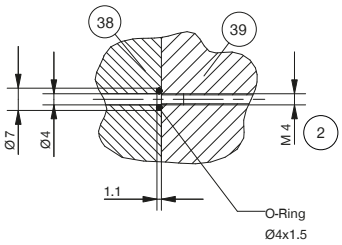


① Gripper attachment
② Energy supply
③ Fixing for gripper finger
⑥ Integrated slot for magnetic field sensor
⑦ Mounting block (not for variant AL-A)
⑲ Air purge connection option (max. 0,5 bar)
㉟ Attachment option for customer-specific fittings
㊳ Adapter
㊴ Gripper
㊹ Clamping sensor (not for variant AL-A)
㊺ Switch cam adjustment (not for variant AL-A)
Ⓐ Air connection (close)
Ⓑ Air connection (open)
Ⓐ' Air connection, alternative (close)
Ⓑ' Air connection, alternative (open)

# 3-JAW CONCENTRIC GRIPPERS
## INSTALLATION SIZE GPD5006

### ▶ ACCESORIES

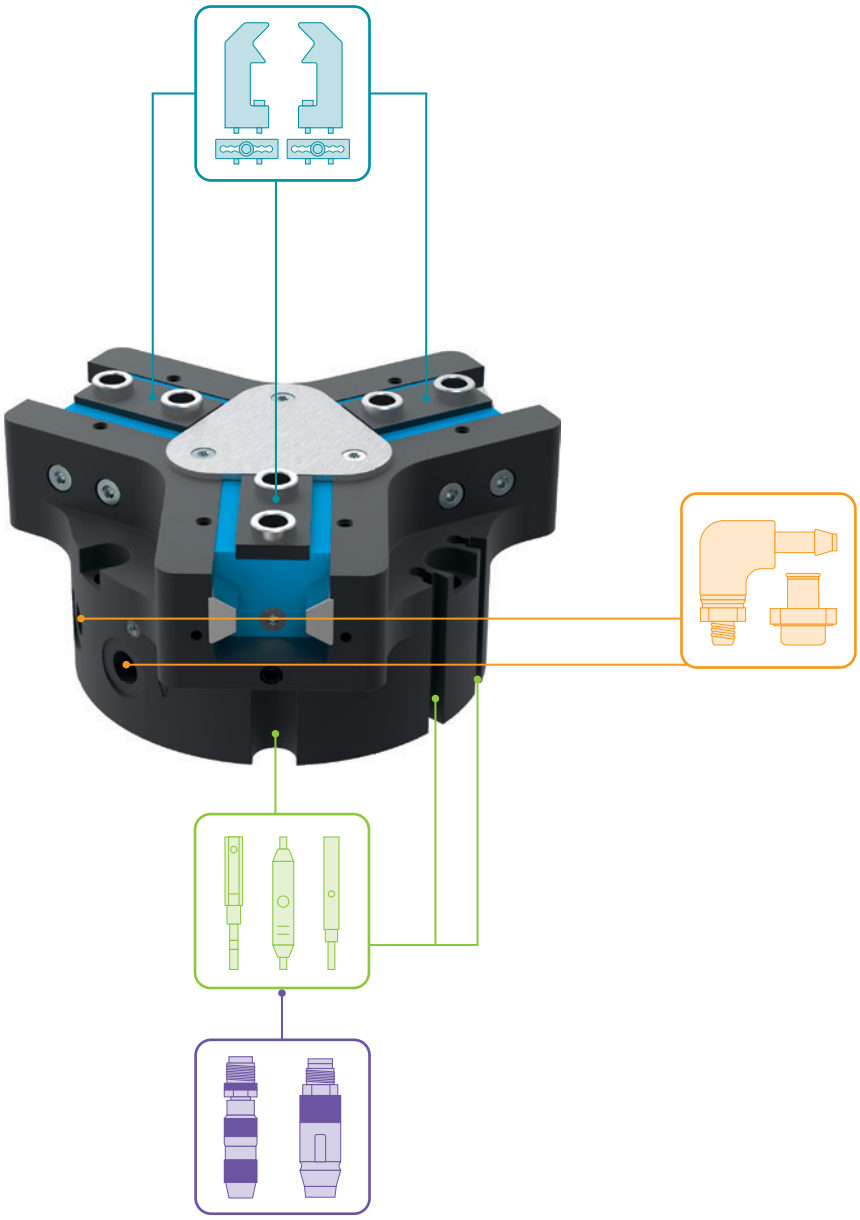

### ▶ INCLUDED IN DELIVERY

6 [piece]
Centering Disc

**024230**

## ▶ RECOMMENDED ACCESSORIES

### GRIPPING COMPONENTS

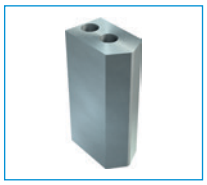

**UB5006AL**
Universal jaw aluminium

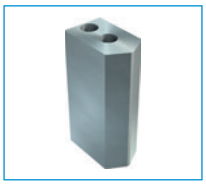

**UB5006ST**
Universal jaw steel

**EB5006AL**
Aluminum adjustment jaw

**EB5006ST**
Steel adjustment jaw

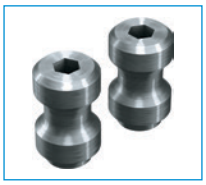

**WB5006L**
Changeable jaw, loose part set

**WB5006F**
Changeable jaw, fixed part

**ADS5006-01**
Pressure piece N / S

**ADS5006-02**
Pressure piece NC / NO / SC / SO

### ENERGY SUPPLY

**WVM5**
Angled Fittings - Quick Connect Style

**DSV1-8**
Pressure safety valve

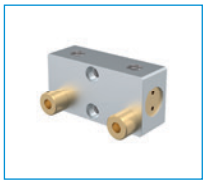

**DSV1-8E**
Pressure safety valve with quick exhaust

### SENSORS

**NJ4-E2SK-01**
Inductive Proximity Switch Cable 0,3 m - Connector M8

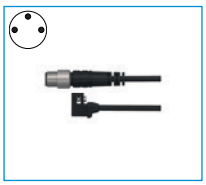

**MFS01-S-KHC-P1-PNP**
Magnetic field sensor angled, cable 0.3 m - M8 connector

**MFS02-S-KHC-P1-PNP**
Magnetic field sensor straight, cable 0.3 m - M8 connector

**MFS01-S-KHC-P2-PNP**
2-point sensor angled, cable 0.3 m - M8 connector

**MFS02-S-KHC-P2-PNP**
2-point sensor straight, cable 0.3 m - M8 connector

**MFS02-S-KHC-IL**
Straight position sensor, cable 0.3 m – M8 plug

### CONNECTIONS / OTHER

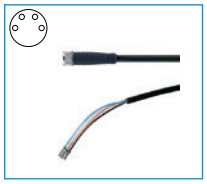

**KAG500B4**
Plug-in connector Straight Cable 5m - female connector M8

**S8-G-4**
Plug-in connector customizable Straight - male connector M8

# 3-JAW CONCENTRIC GRIPPERS
# SERIES GPD5000 FUNCTIONAL DESCRIPTION

## GRIPPING COMPONENTS

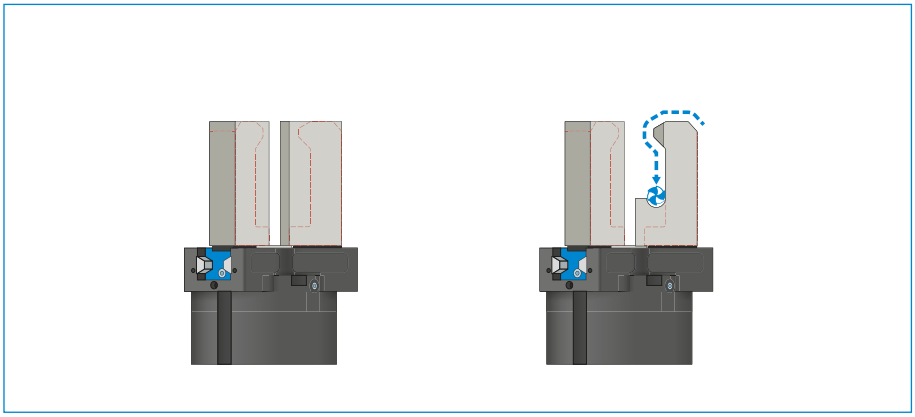

### Universal jaws – UB5000

**Can be used immediately or for individual reprocessing**

The gripper blanks are available in aluminum (AL) and steel (ST) versions and are installed directly on the gripper using the screws in the scope of delivery. The fits for the centering sleeves are already in place for this purpose. One universal jaw is required for each gripper jaw.

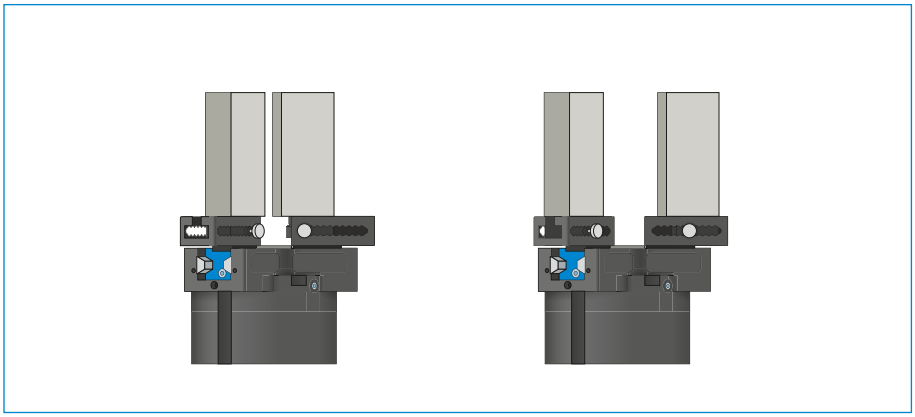

### Adjustment jaws – EB5000

**For tool-free adaptation of the gripper range**

By manually activating the locking mechanism, which is pre-tensioned by a spring, the adjustment jaw can be moved within a grid of detent notches that has a number scale. Depending on the forces and torques that apply, the adjustment jaws are available in aluminum (AL) and steel (ST) versions. One adjustment jaw is required for each gripper jaw.

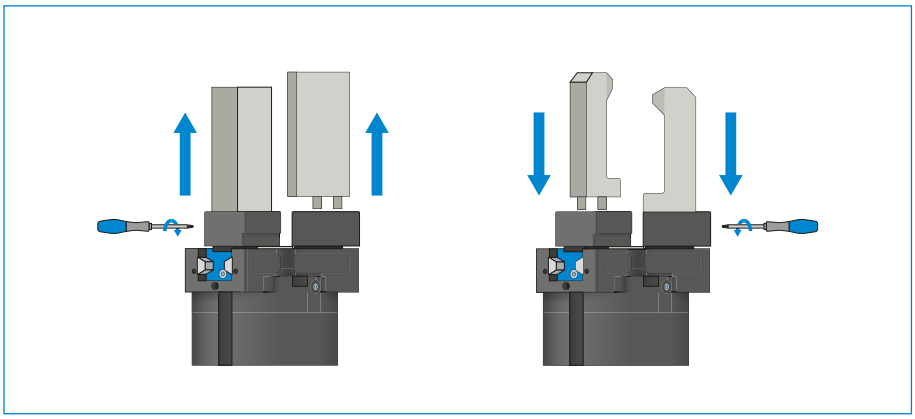

### Interchangeable jaws – WB5000

**Enable fast change of individual gripper fingers**

For each gripper jaw, a fixed part and at least one loose part set is needed, depending on the number of gripper fingers to be changed. Manual locking via the Torx wrench included in the scope of delivery of the fixed part can take place from two sides.

**THE GRIPPING COMPONENTS CAN BE COMBINED!**

The gripper components listed above can be combined with each other and are compatible with the various series of the 5000 gripper family.

## GRIPPING COMPONENTS

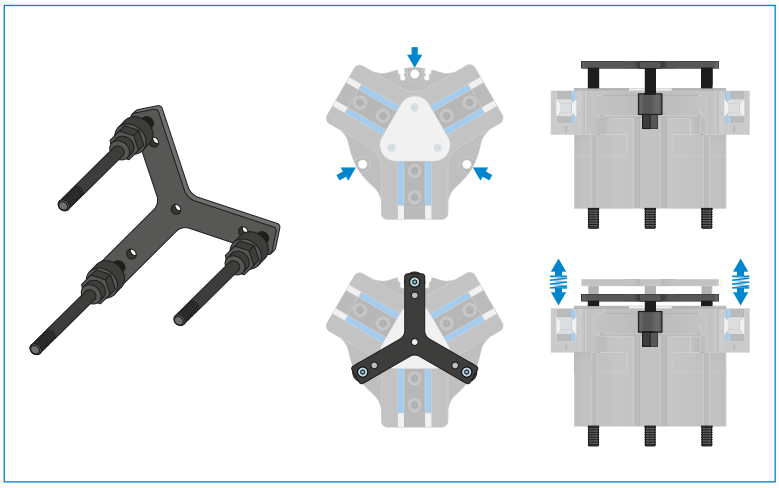

**Pressure piece – ADS5000**
When the gripper fingers are open, the pressure piece is used for spring-supported positioning of the workpiece against a limit stop. This greatly reduces the loads on the gripper that arise during joining.

## ENERGY SUPPLY

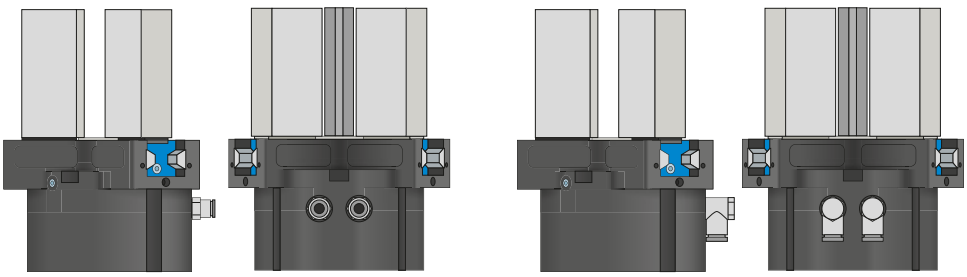

**Pneumatic threaded connections**
Available in straight and angled design. Can be chosen freely depending on the space conditions or installation situation.

# 3-JAW CONCENTRIC GRIPPERS
## SERIES GPD5000 FUNCTIONAL DESCRIPTION

### ENERGY SUPPLY

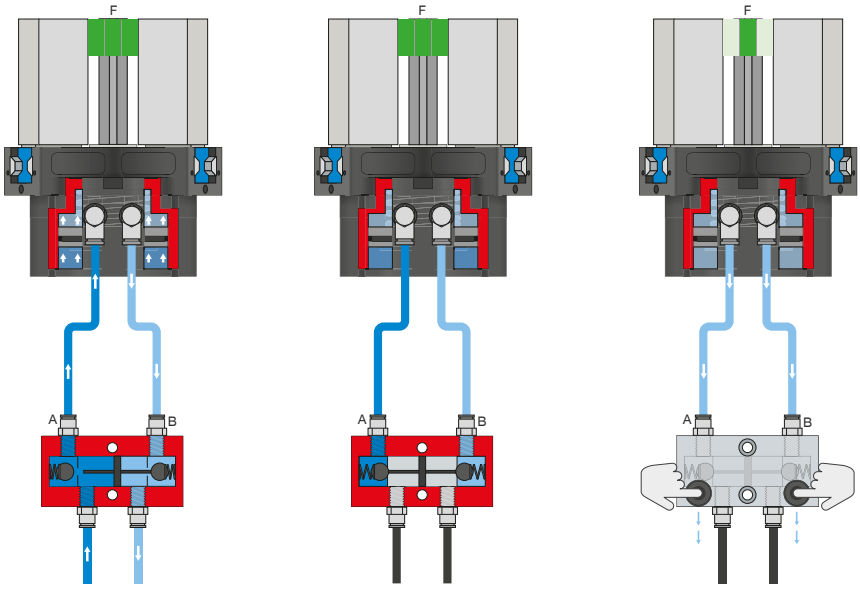


**Pressure safety valve – DSV**

**Ensures safe retention of force and position if the system pressure drops**

The integrated double check valve, which can be unlocked, retains the system pressure of the gripper in case of EMERGENCY STOP. To ensure the function, the valve must be installed as close to the gripper's air connection as possible. In variant E, two pushbuttons are installed that allow for controlled bleeding of the gripper.

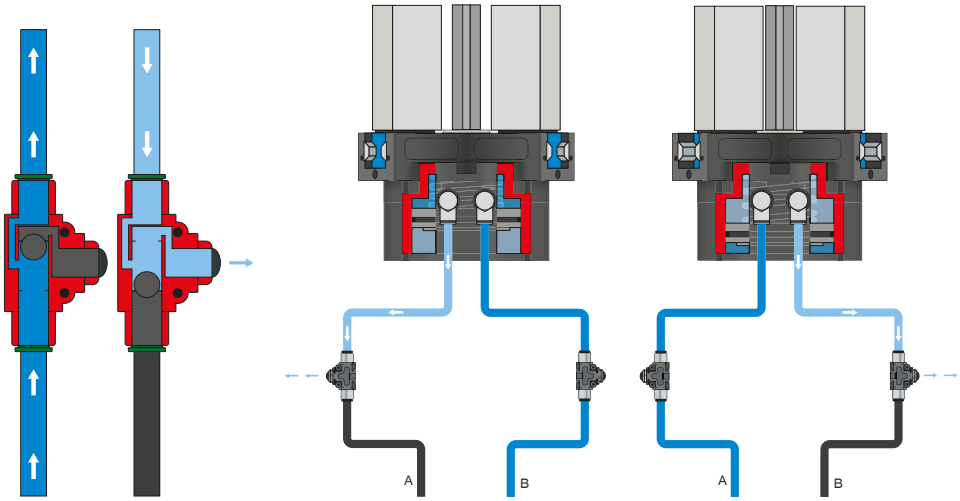


**Quick exhaust valve – DEV**

**For rapid bleeding of the compressed air and preventing back pressure**

The inline valves make a faster cycle time possible and prevent the formation of condensate in grippers with a small cylinder volume. To ensure the function, the valve must be installed as close to the gripper's air connection as possible.

## SENSORS

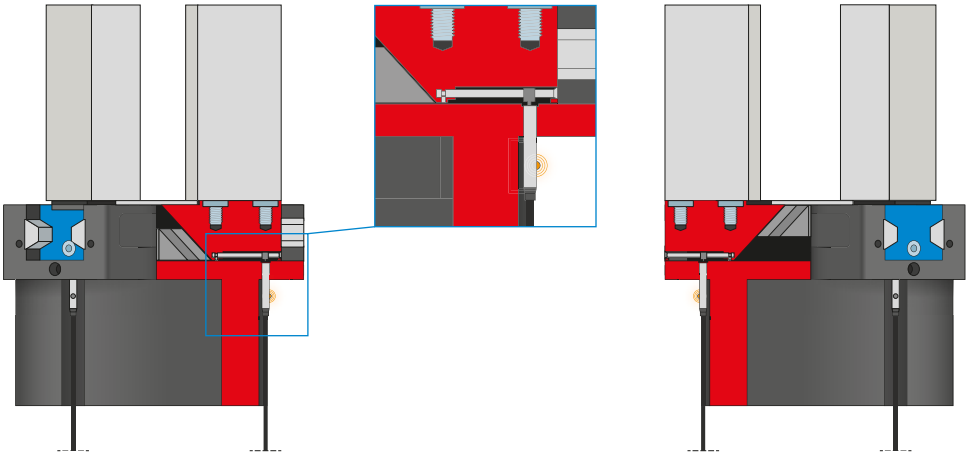

### Inductive sensors – NJ

**For direct position sensing of the gripper jaws**

The sensor is guided into the intake as far as it will go and fixed in place using the lateral clamping screw. Tuning to the desired position then takes place by adjusting the cam switch. The sensors are available in versions with 5 m cables with exposed leads and 0,3 m cable with male connector, as well as with direct male connector orientation.

# 3-JAW CONCENTRIC GRIPPERS
## SERIES GPD5000 FUNCTIONAL DESCRIPTION

### SENSORS

MFS02

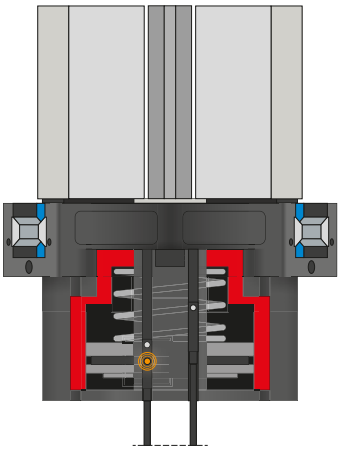

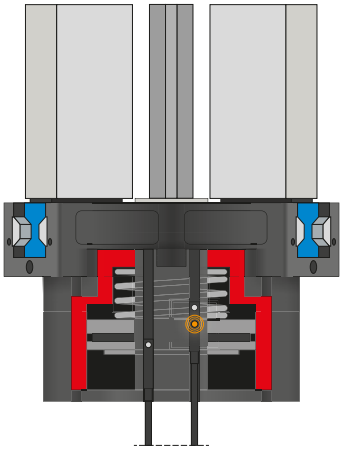

MFS01

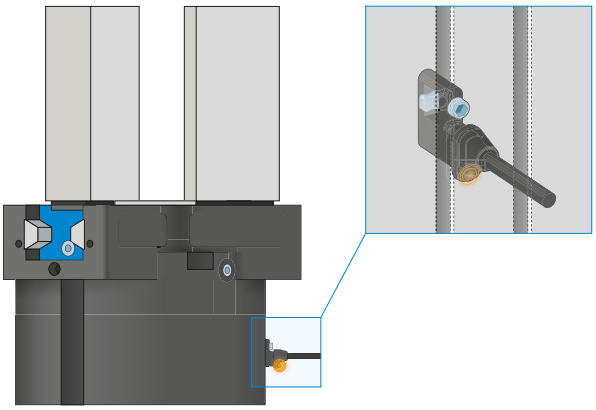

**1-point magnetic field sensors – MFS**

**For non-contact sensing of the piston position**

These sensors are installed in the C-groove of the gripper and detect the magnet attached to the piston of the gripper. To ensure use in a wide variety of space conditions, the sensors are available in two variants. While the horizontal MFS02, with straight cable outlet, disappears into the C-groove of the gripper almost completely, the vertical MFS01 is taller, but has a cable outlet that is offset at an angle of 90°. The variants are available in versions with 5 m cables with exposed leads and 0,3 m cable with connector.

## SENSORS

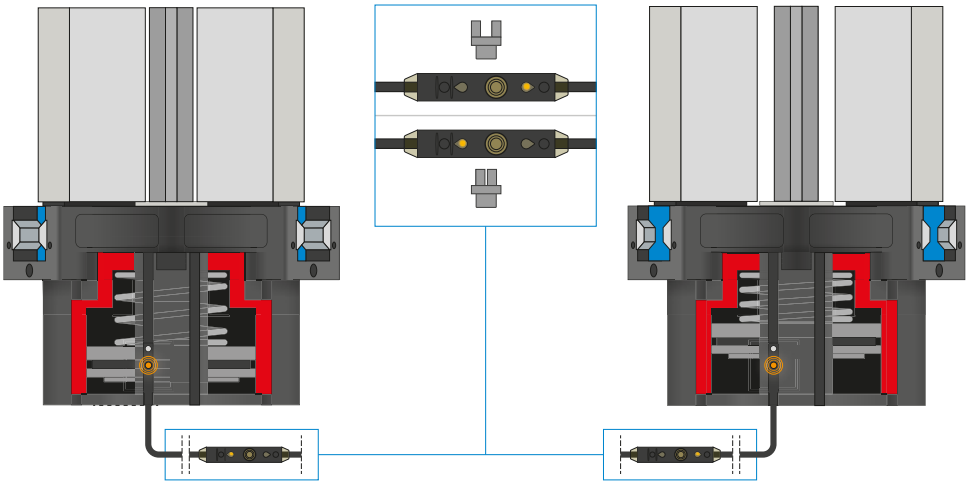

### 2-point magnetic field sensors – MFS

**With two freely programmable switching points**

Using the programming unit integrated in the cable, two switch points can be freely defined for this sensor. To do so, the sensor is clamped in the C-groove, the gripper approaches position one and the position is taught in using the teach button. Afterwards, the second position is approached with the gripper and programmed. To ensure use in a wide variety of space conditions, the sensors are available in two variants. While the horizontal MFS02, with straight cable outlet, disappears into the C-groove of the gripper almost completely, the vertical MFS01 is taller, but has a cable outlet that is offset at an angle of 90°. The sensors are available in versions with 5 m cables with exposed leads and 0,3 m cable with connector.

## CONNECTIONS / OTHER

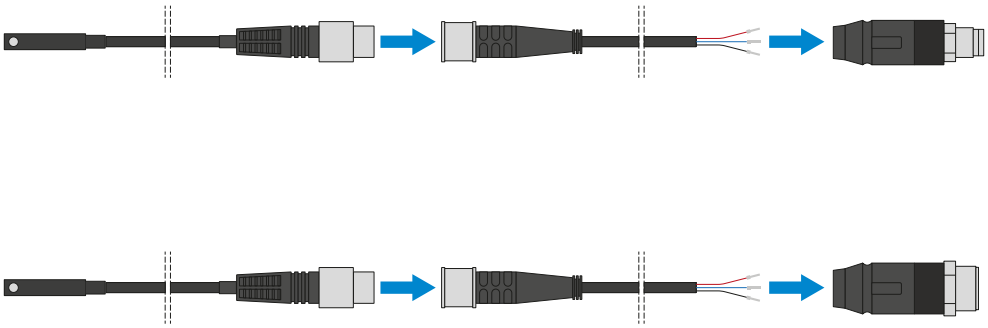

### Plug-in connectors

**For extending and fabricating the connection lines for the sensors**

Cables with a length of 5 m with exposed leads are available. Depending on the specific needs, the cables can be shortened or fabricated with connectors in sizes M8 and M12.

### CONNECTIONS / OTHER

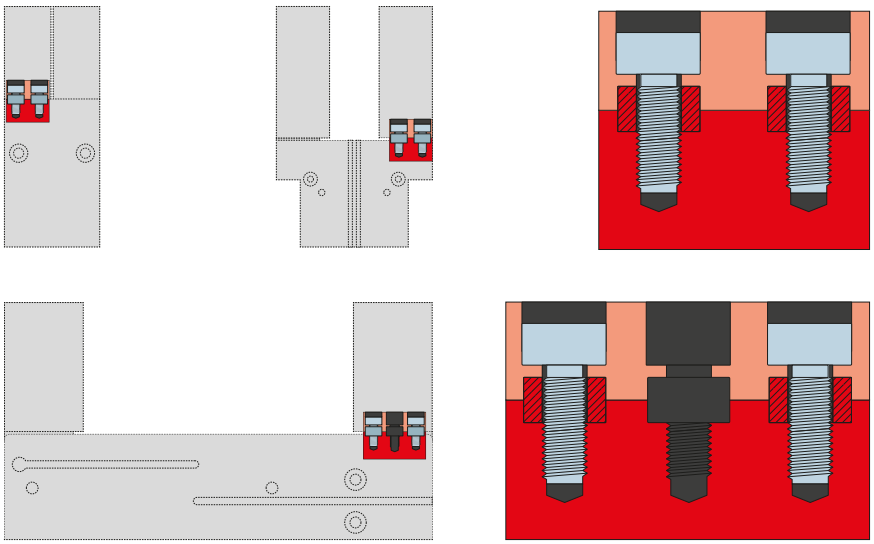

**Centering sleeves**

**For defined position measurement of the gripper fingers**

The centering sleeves are inserted into the fits of the gripper jaws to define the position of the gripper fingers. The centering sleeves are comparable to a pin connection.