2-JAW PARALLEL GRIPPERS WITH LONG STROKE
SERIES GPH8000

▶ PRODUCT ADVANTAGES

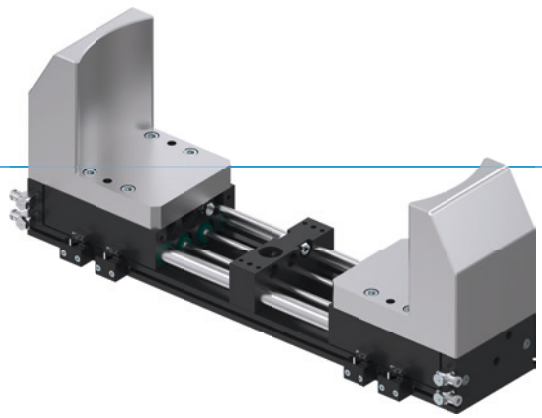

“The powerful”

- **Extremely long and heavy gripper fingers possible**

  Despite their flat structural design, one of the features of the gripper fingers is that there are virtually no limitations where it comes to loading the machine with engine blocks or rims.

- **Synchronous, asynchronous and securing the workpiece**

  Select between synchronous or asynchronous gripper finger movement and increase process safety by using the integrated clamping element to secure the workpiece in the event of a drop in pressure

- **Dirt protection**

  Using the scrapers on the guides, you can reliably use the gripper even under the harshest conditions

▶ SERIES CHARACTERISTICS

Installation size	Version		
GPH8XXX	N-00	CL-00	CL-30
Gripper jaws are synchronized	●	●	
Position maintenance by means of clamping element		●	●
5 million maintenance-free cycles (max.)	●	●	●
Inductive sensor	●	●	●
Protected against corrosion	●	●	●
IP54	●	●	●

▶ BENEFITS IN DETAIL

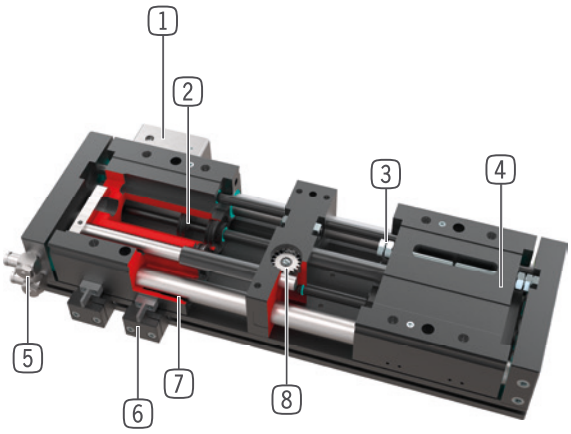

1 **Clamping element**
- Workpiece secured in the event of a drop in pressure

2 **Drive**
- two double-acting pneumatic cylinders

3 **Stroke adjustment**
- possible on both sides via stroke adjustment screws

4 **Gripper jaw**
- individual gripper finger mounting

5 **Energy supply**
- possible from several sides
- CAUTION: always operate long stroke gripper with supplied exhaust air flow control valve (speed regulation)

6 **Mounting block**
- mounting for inductive proximity switch

7 **Roller slide**
- sealed round guide for harsh environmental conditions
- Maintenance-free plain bearing bushes

8 **Synchronization**
- By means of gear and rack
- Encapsulated and protected against dirt
- Also available as an asynchronous variant

▶ TECHNICAL DATA

Installation size	Stroke per jaw [mm]	Gripping force [N]	Weight [kg]	IP class
GPH8200	60 - 100	900	5,7 - 8,3	IP54
GPH8300	62,5 - 150	2000	15,2 - 21,4	IP54
GPH8400	80 - 220	3300	33,9 - 51	IP54

▶ FURTHER INFORMATION IS AVAILABLE ONLINE

All information just a click away at: www.zimmer-group.com. Find data, illustrations, 3D models and operating instructions for your installation size using the order number for your desired product. Quick, clear and always up-to-date.

2-JAW PARALLEL GRIPPERS WITH LONG STROKE
INSTALLATION SIZE GPH83100

▶ PRODUCT SPECIFICATIONS

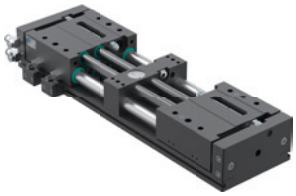

▶ Gripping force diagram

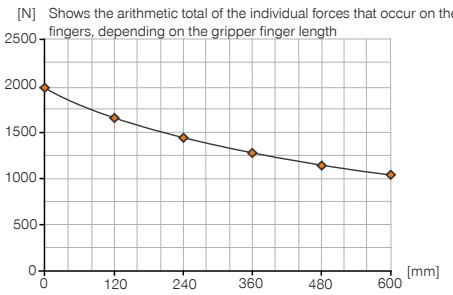

▶ Forces and moments

Displays static forces and moments that can also have an effect, besides the gripping force.

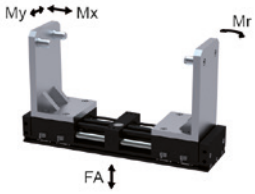

Mr [Nm]	1020
Mx [Nm]	1010
My [Nm]	1020
Fa [N]	18000

▶ INCLUDED IN DELIVERY (SYNCHRONOUS / -00-A)

2 [piece]
Mounting block
ANS000001

2 [piece]
Centering Disc
059600

2 [piece]
Flow Control Valves - with Swivel joint
DRV1-4X8

▶ INCLUDED IN DELIVERY (ASYNCHRONOUS / -30-A)

4 [piece]
Mounting block
ANS000001

2 [piece]
Centering Disc
059600

4 [piece]
Flow Control Valves - with Swivel joint
DRV1-4X8

▶ RECOMMENDED ACCESSORIES

SENSORS

NJ12-E2S
Inductive proximity switch, M12

CONNECTIONS / OTHER

KAG500
Plug-in connector Straight Cable 5m - female connector M8

KAW500
Plug-in connector Angled Cable 5m - female connector M8

CONNECTIONS / OTHER

S8-G-3
Plug-in connector customizable Straight - male connector M8

S12-G-3
Plug-in connector customizable Straight - male connector M12

PHE14X15NHDD-A
Industrial shock absorbers PowerStop

	► Technical data		
Order no.	**GPH83100N-00-A**	**GPH83100CL-00-A**	**GPH83100CL-30-A**
Gripper jaws are synchronized	Yes	Yes	
Position maintenance by means of clamping element		Yes	Yes
No. of clamping elements [piece]	0	1	2
Holding force per clamping element [N]		2300	2300
Stroke per jaw [mm]	100	100	100
Gripping force in closing / opening [N]	2000 / 2000	2000 / 2000	2000 / 2000
Closing time [s]	0.5	0.5	0.5
Opening time [s]	0.5	0.5	0.5
Dead weight of mounted gripper finger max. [kg]	35	35	35
Length of the gripper fingers max. [mm]	600	600	600
Repetition accuracy +/- [mm]	0.05	0.05	0.05
Operating pressure [bar]	4 ... 8	4 ... 8	4 ... 8
Nominal operating pressure [bar]	6	6	6
Operating temperature [°C]	+5 ... +80	+5 ... +80	+5 ... +80
Air volume per cycle [cm³]	714	714	714
Certifications	LABS / REACH / RoHS	LABS / REACH / RoHS	LABS / REACH / RoHS
Protection to IEC 60529	IP54	IP54	IP54
Weight [kg]	16	17	17

GPH83100N-00-A

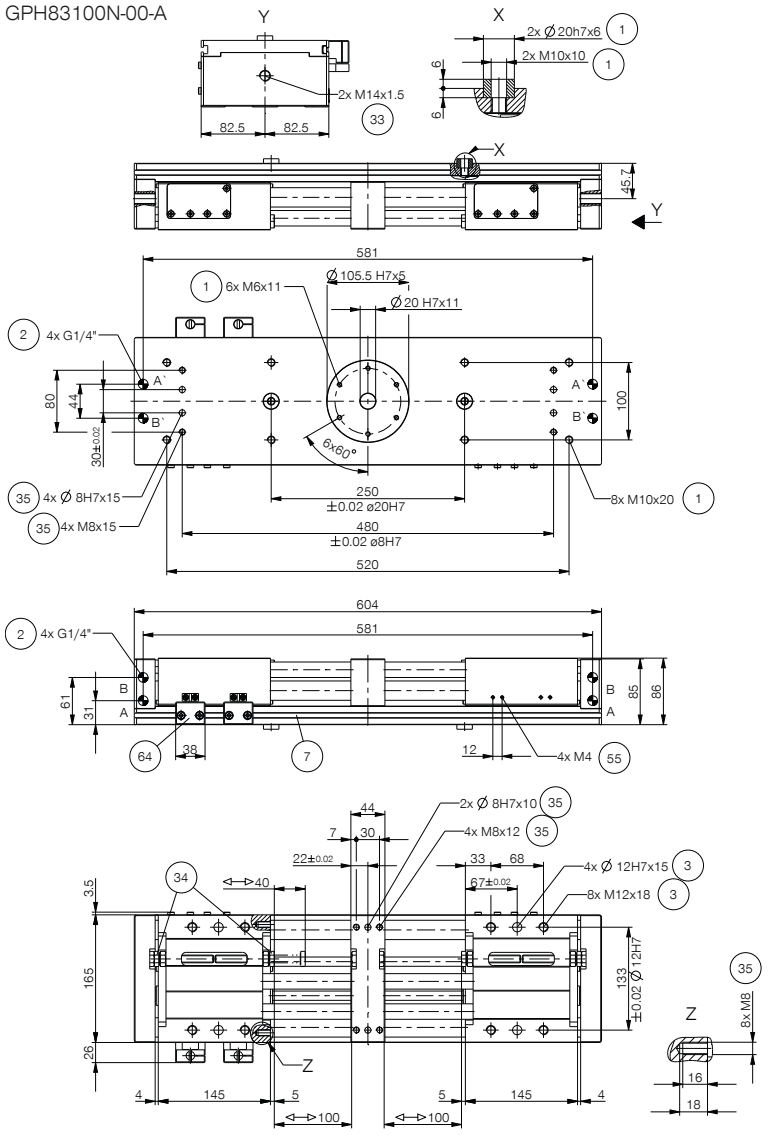

1 Gripper attachment
2 Energy supply
3 Fixing for gripper finger
7 Fixing for mounting block
33 Shock absorber
34 Stop screw for stroke setting
35 Attachment option for customer-specific fittings
55 Cam switch attachment
62 Clamping element
63 Energy supply clamping element
64 Clamp for sensor
A Air connection (close)
B Air connection (open)
A' Air connection, alternative (close)
B' Air connection, alternative (open)

GPH83100CL-00-A

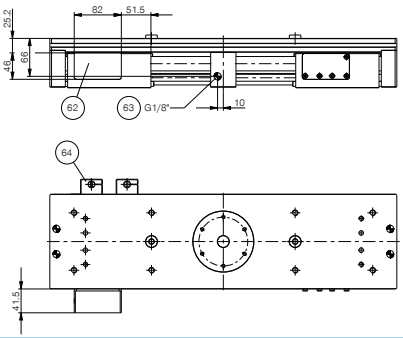

GPH83100CL-30-A

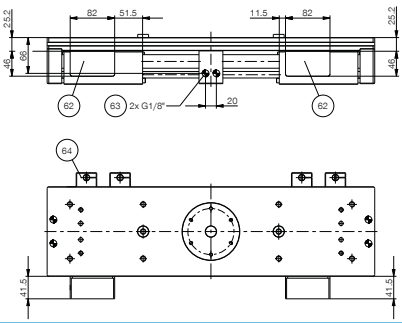

2-JAW PARALLEL GRIPPERS WITH LONG STROKE
SERIES GPH8000 FUNCTIONAL DESCRIPTION

ENERGY SUPPLY

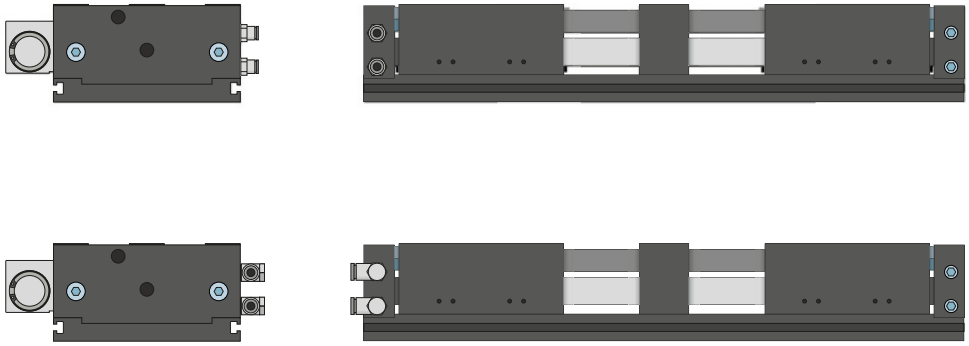

Pneumatic threaded connections

Available in straight and angled design. Can be chosen freely depending on the space conditions or installation situation.

SENSORS

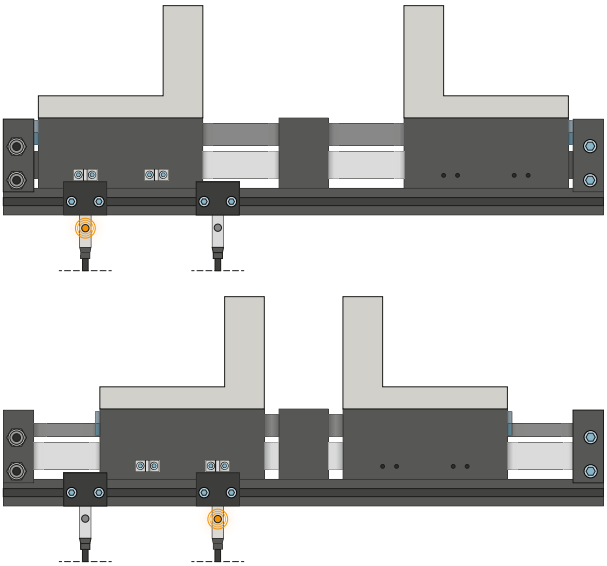

Inductive sensors – NJ

The mounting block is aligned to the cam switch, and the sensor is guided into the mounting block until the required switching distance to the cam switch is reached. Fine adjustment can be made by moving the mounting block again. The sensors are available in versions with 5 m cables with exposed leads and 0,3 m cable with male connector, as well as with direct male connector orientation.

CONNECTIONS / OTHER

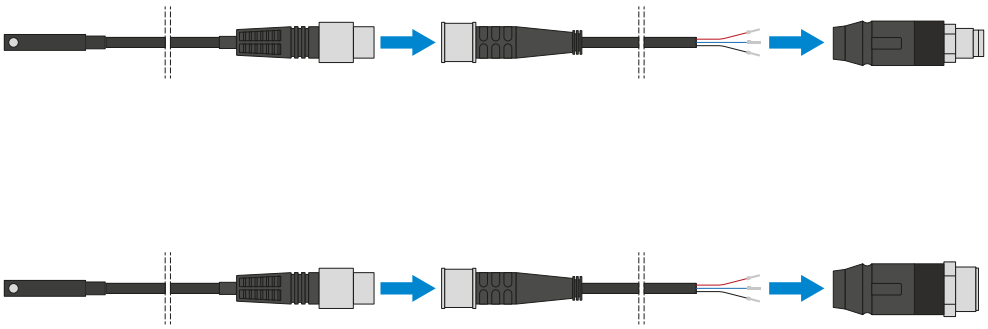

Plug-in connectors

For extending and fabricating the connection lines for the sensors

Cables with a length of 5 m with exposed leads are available. Depending on the specific needs, the cables can be shortened or fabricated with connectors in sizes M8 and M12.

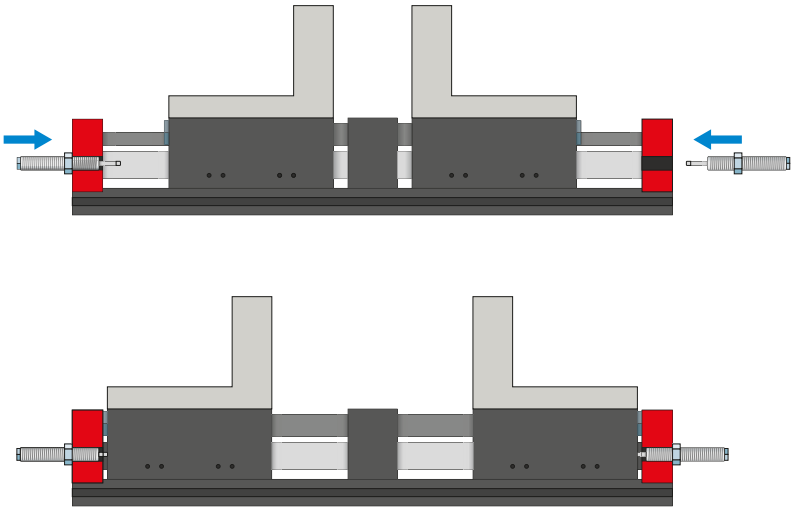

PowerStop shock absorber

For soft absorption of kinetic energy

The shock absorbers are used primarily in fast, unthrottled jaw movements. They are equally suitable for long gripper fingers, high jaw mass and for cycle time optimization. The energy is absorbed by means of a hydraulic industrial shock absorber.

CONNECTIONS / OTHER

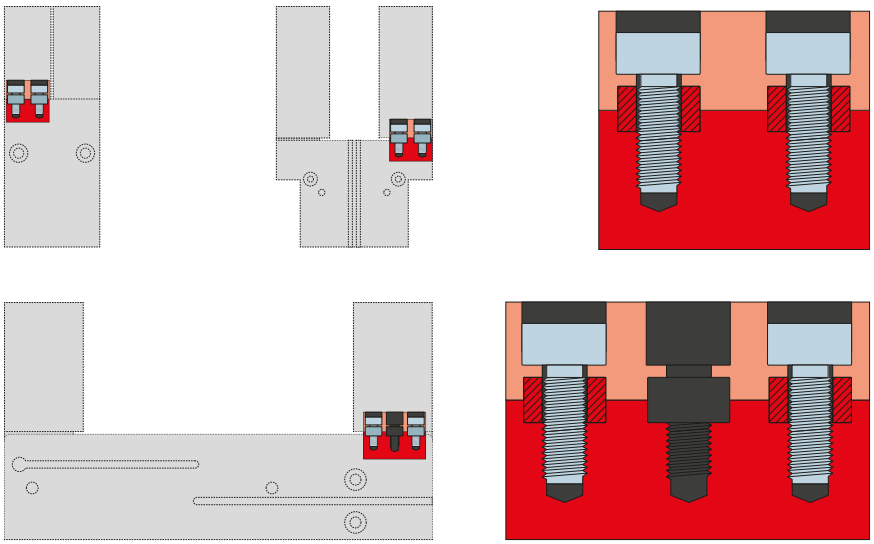

Centering sleeves

For defined position measurement of the gripper fingers

The centering sleeves are inserted into the fits of the gripper jaws to define the position of the gripper fingers. The centering sleeves are comparable to a pin connection.