2-JAW PARALLEL GRIPPERS
SERIES GPP5000IL

▶ PRODUCT ADVANTAGES

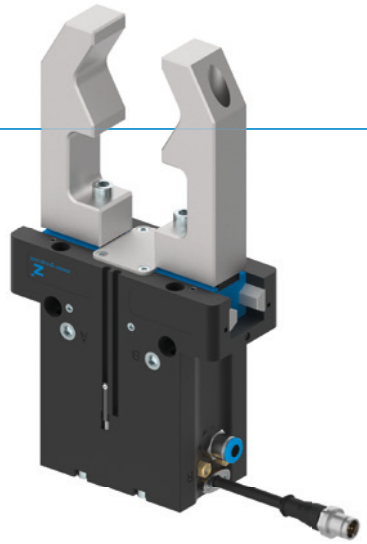

IO-Link

"The hybrid"

- **Pneumatic drive combined with IO-Link technology**
- **Up to 50% reduction in cycle times and up to 90% less compressed air usage**
- **Connection over just one pneumatic line and IO-Link cable**
- **Integrated valve technology, sensor technology, status display, pressure monitoring and temperature monitoring**
- **Part detection down to +/- 0.05 mm for a tolerance range that can be taught for any value**
- **32 workpieces data sets can be programmed**
- **Protected from corrosion and sealed in accordance with IP64**
- **Up to 30 million cycles without maintenance**

▶ SERIES CHARACTERISTICS

Installation size	Version					
GPP50XXIL	N	NC	NO	S	SC	SO
IO-Link	●	●	●	●	●	●
Spring closing C		●			●	
Spring opening O			●			●
High-strength S				●	●	●
30 million maintenance-free cycles (max.)	●	●	●	●	●	●
Integrated sensing	●	●	●	●	●	●
Integrated valve technology	●	●	●	●	●	●
Protected against corrosion	●	●	●	●	●	●
Purged air	●	●	●	●	●	●
IP64	●	●	●	●	●	●

▶ BENEFITS IN DETAIL

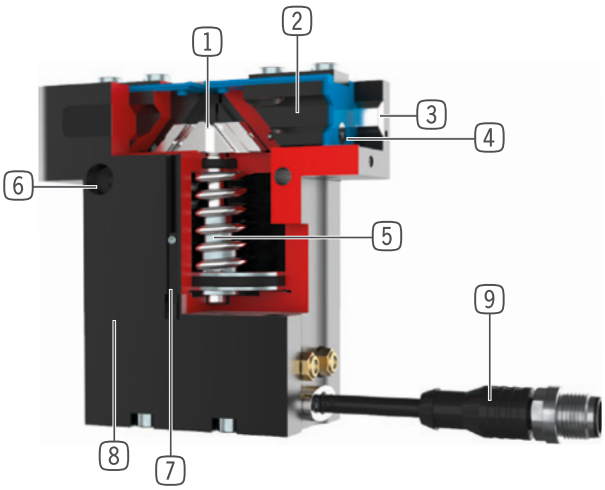

1 **Wedge hook mechanism**
- Supports to absorb high forces and moments
- Synchronized gripper jaw movement

2 **Gripper jaw**
- Gripper fingers mounted using removable centering sleeves
- Lubricated for life via incorporated lubrication slots

3 **Steel Linear Guide**
- Steel in steel guide
- Enables use of extremely long gripper fingers

4 **Dual lip seal**
- IP64
- Prevents grease from being squeezed out, increasing service life

5 **Integrated gripping force safety device**
- Spring built into cylinder chamber as an energy store

6 **Mounting and positioning**
- Alternatively, on several sides for customized mounting

7 **Position sensing**
- integrated Hallsensor

8 **Integrated valve technology**
- Activation of the gripper by means of a compressed air supply

9 **Integrated control module**
- Single-cable solution via IO-Link
- Pressure, temperature, position and other parameters are readable

▶ TECHNICAL DATA

Installation size	Stroke per jaw [mm]	Gripping force [N]	Weight [kg]	IP class
GPP5006IL	3 - 6	330 - 1080	0,45 - 0,53	IP64
GPP5008IL	4 - 8	520 - 1670	0,75 - 0,87	IP64
GPP5010IL	5 - 10	885 - 2890	1,23 - 1,45	IP64
GPP5013IL	6 - 13	1410 - 4400	2,5 - 2,9	IP64
GPP5016IL	8 - 16	2090 - 6600	4,4 - 5,1	IP64
GPP5025IL	14 - 25	3280 - 9130	8,5 - 10,4	IP64

▶ FURTHER INFORMATION IS AVAILABLE ONLINE

All information just a click away at: www.zimmer-group.com. Find data, illustrations, 3D models and operating instructions for your installation size using the order number for your desired product. Quick, clear and always up-to-date.

2-JAW PARALLEL GRIPPERS
INSTALLATION SIZE GPP5008IL

▶ PRODUCT SPECIFICATIONS

▶ Gripping force diagram

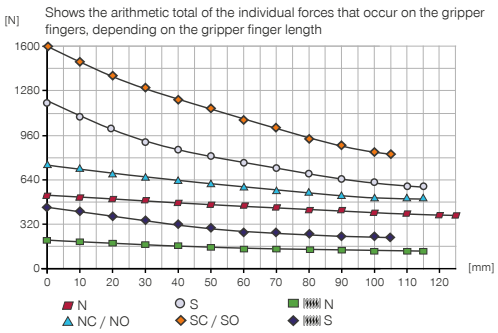

▶ Forces and moments

Displays static forces and moments that can also have an effect, besides the gripping force.

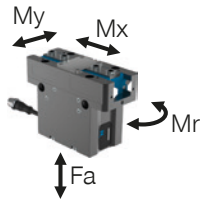

Mr [Nm]	60
Mx [Nm]	105
My [Nm]	65
Fa [N]	1900

▶ TECHNICAL DATA

▶ Technical data

Order no.	GPP5008N-IL-10-A	GPP5008NC-IL-10-A	GPP5008NO-IL-10-A	GPP5008S-IL-10-A	GPP5008SC-IL-10-A	GPP5008SO-IL-10-A
Control	IO-Link	IO-Link	IO-Link	IO-Link	IO-Link	IO-Link
Stroke per jaw [mm]	8	8	8	4	4	4
Gripping force in closing [N]	520	710		1150	1580	
Gripping force in opening [N]	560		750	1240		1670
Gripping force secured by spring min. [N]		190	190		430	430
Cycle count max. [cycle/min]	290	200	200	290	200	200
Dead weight of mounted gripper finger max. [kg]	0.7	0.7	0.7	0.7	0.7	0.7
Length of the gripper fingers max. [mm]	125	115	115	115	105	105
Repetition accuracy +/- [mm]	0.01	0.01	0.01	0.01	0.01	0.01
Operating pressure [bar]	3 ... 8	4 ... 7	4 ... 7	3 ... 8	4 ... 7	4 ... 7
Nominal operating pressure [bar]	6	6	6	6	6	6
Operating temperature [°C]	+5 ... +50	+5 ... +50	+5 ... +50	+5 ... +50	+5 ... +50	+5 ... +50
Air volume per cycle [cm³]	22	43	43	22	43	43
Integrated valve technology	Yes	Yes	Yes	Yes	Yes	Yes
Integrated position sensing	Yes	Yes	Yes	Yes	Yes	Yes
Voltage [V]	24	24	24	24	24	24
Current consumption max. [A]	0.10	0.10	0.10	0.10	0.10	0.10
Certifications	CE / UKCA / LABS / REACH / RoHS	CE / UKCA / LABS / REACH / RoHS	CE / UKCA / LABS / REACH / RoHS	CE / UKCA / LABS / REACH / RoHS	CE / UKCA / LABS / REACH / RoHS	CE / UKCA / LABS / REACH / RoHS
Protection to IEC 60529	IP64	IP64	IP64	IP64	IP64	IP64
Weight [kg]	0.75	0.85	0.84	0.77	0.87	0.86

▶ TECHNICAL DRAWINGS

NC / NO / SC / SO

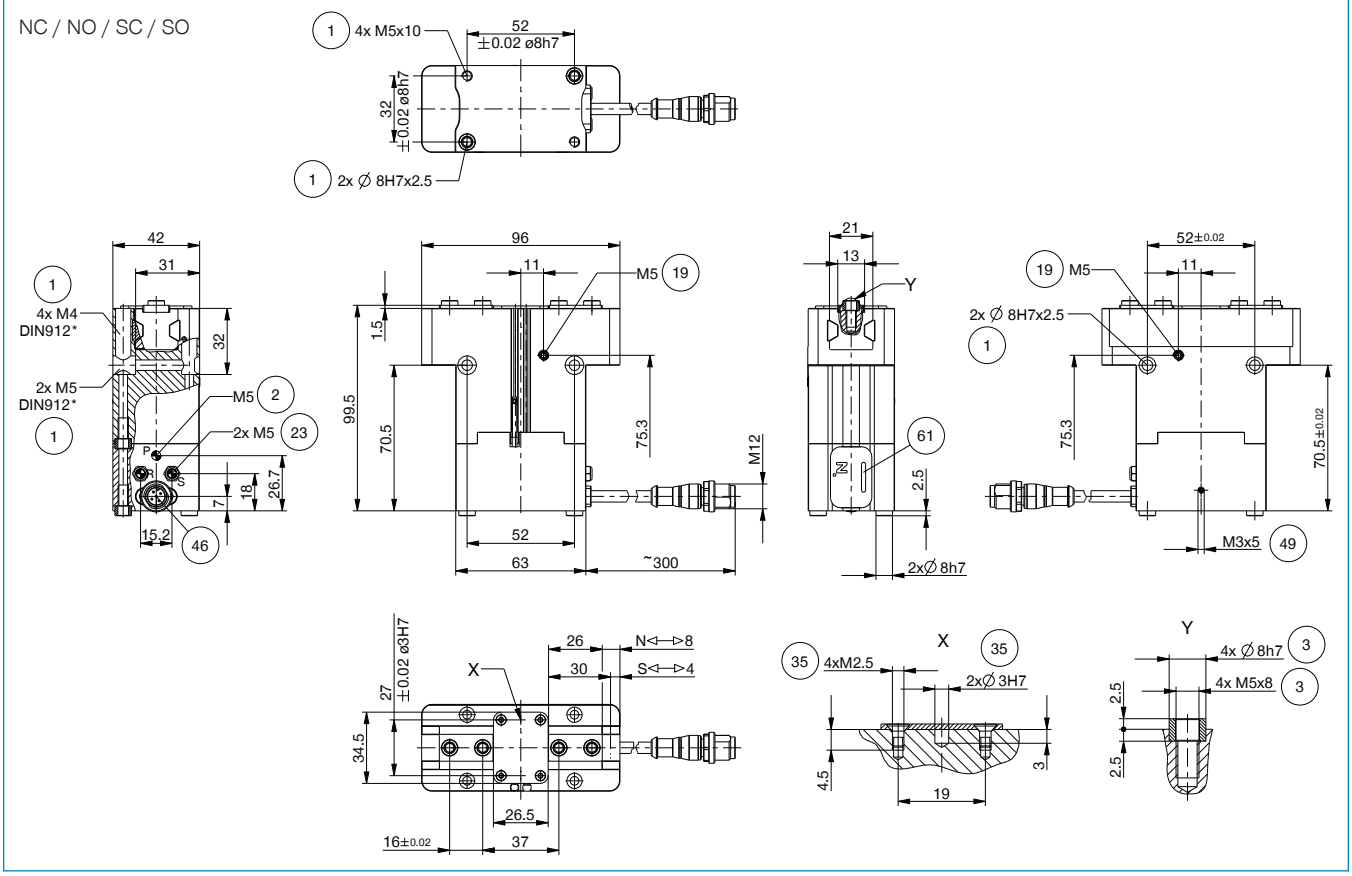

N / S

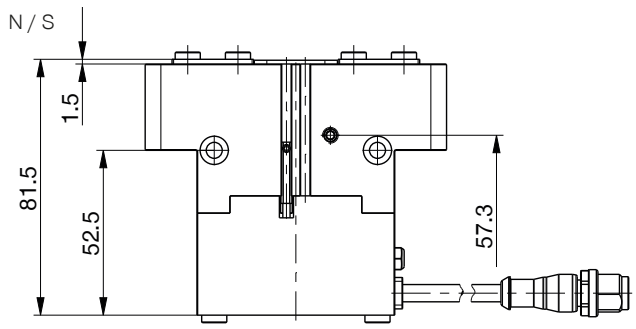

① Gripper attachment

② Energy supply

③ Fixing for gripper finger

⑲ Air purge connection option

㉓ Ventilation (R+S: In dirty environments, replace filters with actual exhaust hoses and move the exhaust air outlet to a clean environment)

㉟ Attachment option for customer-specific fittings

㊻ Energy supply IO-Link (M12, 5-pole)

㊾ Ground

㊶ Status display

2-JAW PARALLEL GRIPPERS
INSTALLATION SIZE GPP5008IL

▶ ACCESORIES

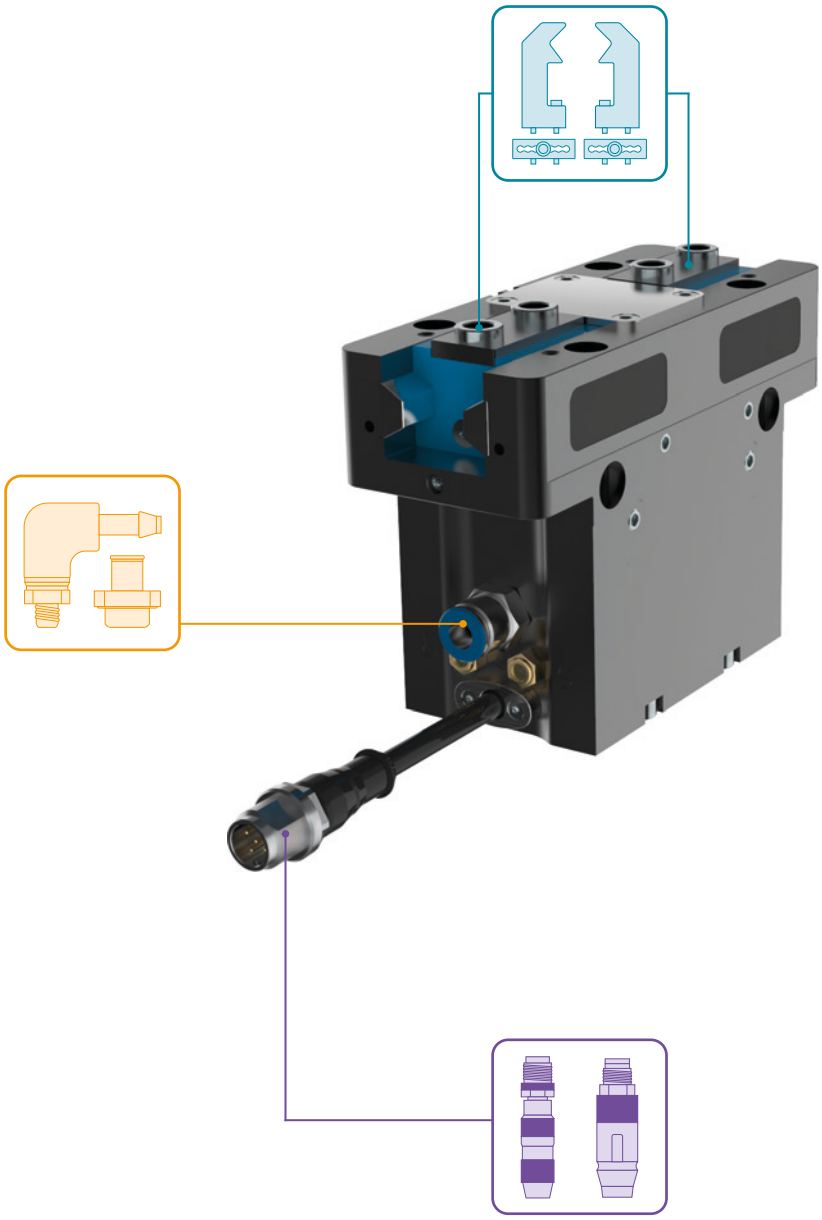

▶ INCLUDED IN DELIVERY

6 [piece]
Centering Disc

024231

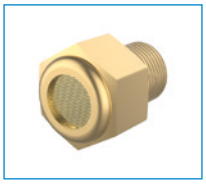

2 [piece]
Filters

CFILT00010

▶ RECOMMENDED ACCESSORIES

GRIPPING COMPONENTS

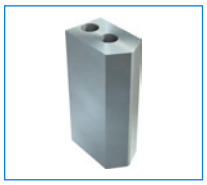

UB5008AL
Universal jaw aluminium

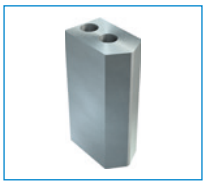

UB5008ST
Universal jaw steel

EB5008AL
Aluminum adjustment jaw

EB5008ST
Steel adjustment jaw

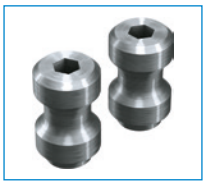

WB5008L
Changeable jaw, loose part set

WB5008F
Changeable jaw, fixed part

ENERGY SUPPLY

GVM5
Straight Fittings - Quick Connect Style

DSV06
Return valve

CONNECTIONS / OTHER

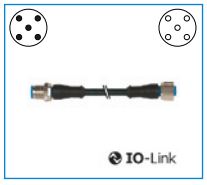

KAG500IL
Plug-in connector straight 5 m - plug, female connector M12

SCM-C-00-00-A
Smart Communication Module

2-JAW PARALLEL GRIPPERS
SERIES GPP5000IL FUNCTIONAL DESCRIPTION

GRIPPING COMPONENTS

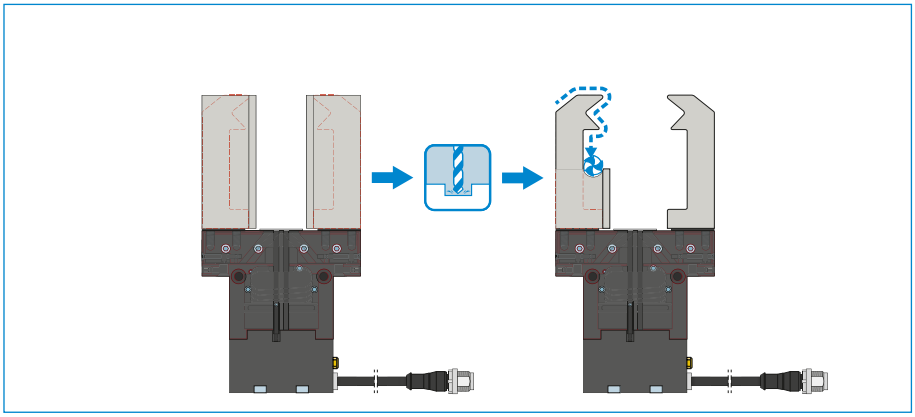

Universal jaws – UB5000

Can be used immediately or for individual reprocessing

The gripper blanks are available in aluminum (AL) and steel (ST) versions and are installed directly on the gripper using the screws in the scope of delivery. The fits for the centering sleeves are already in place for this purpose. One universal jaw is required for each gripper jaw.

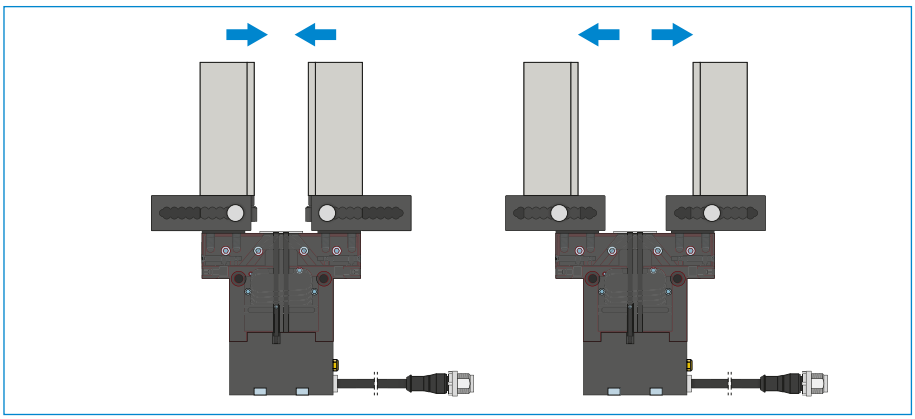

Adjustment jaws – EB5000

For tool-free adaptation of the gripper range

By manually activating the locking mechanism, which is pre-tensioned by a spring, the adjustment jaw can be moved within a grid of detent notches that has a number scale. Depending on the forces and torques that apply, the adjustment jaws are available in aluminum (AL) and steel (ST) versions. One adjustment jaw is required for each gripper jaw.

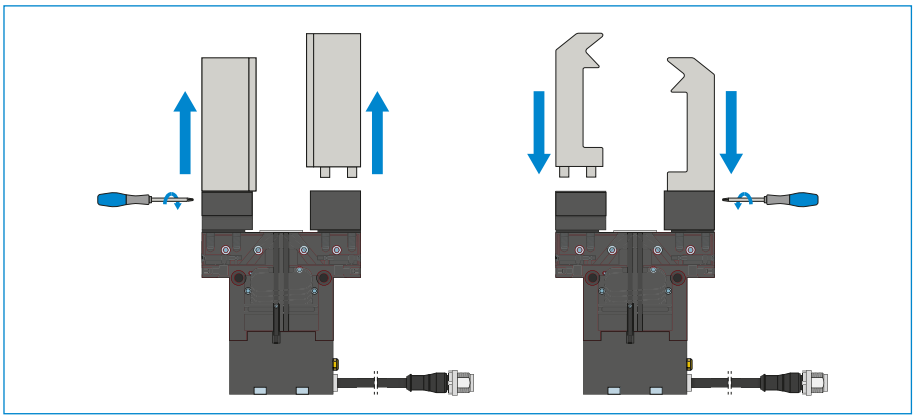

Interchangeable jaws – WB5000

Enable fast change of individual gripper fingers

For each gripper jaw, a fixed part and at least one loose part set is needed, depending on the number of gripper fingers to be changed. Manual locking via the Torx wrench included in the scope of delivery of the fixed part can take place from two sides.

THE GRIPPING COMPONENTS CAN BE COMBINED!

The gripper components listed above can be combined with each other and are compatible with the various series of the 5000 gripper family.

ENERGY SUPPLY

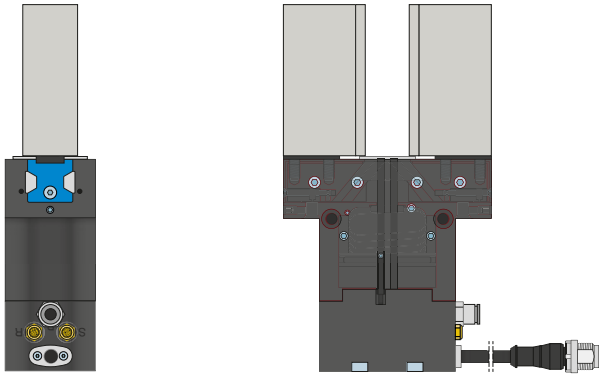

Pneumatic threaded connections

Available in straight and angled design. Can be chosen freely depending on the space conditions or installation situation.

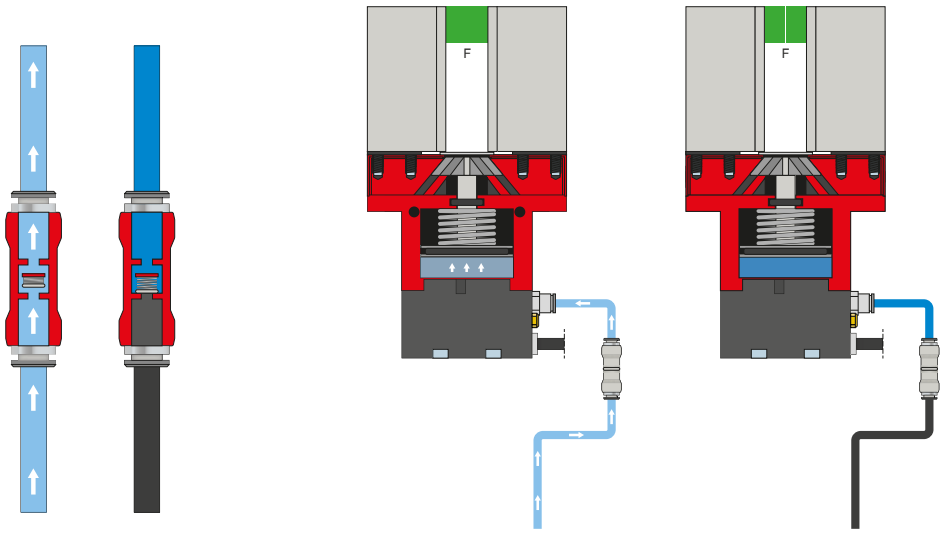

Pressure safety valve – DSV

The throttle check valve integrated into the supply air line retains the system pressure in case of EMERGENCY STOP. To ensure the function, the valve must be installed as close to the gripper's air connection as possible. Control voltage and actuator voltage must be maintained for this purpose.

CONNECTIONS / OTHER

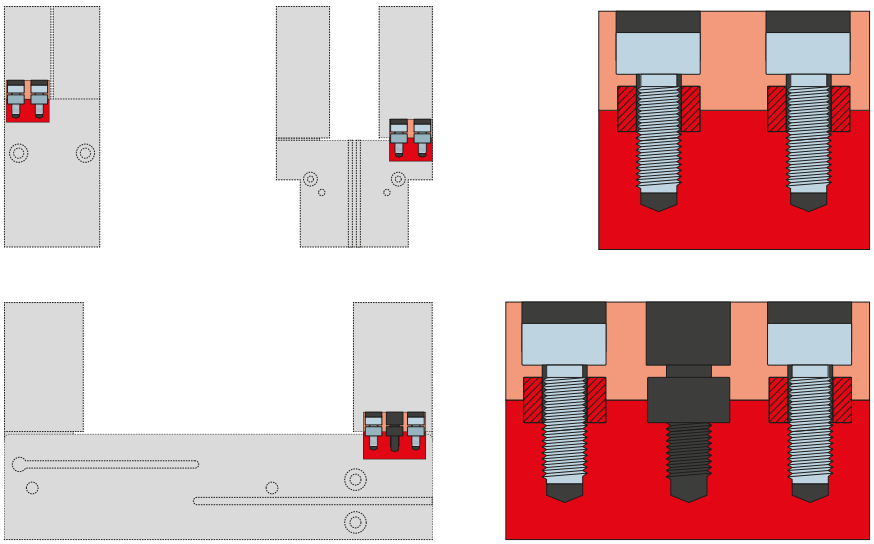

Centering sleeves

For defined position measurement of the gripper fingers

The centering sleeves are inserted into the fits of the gripper jaws to define the position of the gripper fingers. The centering sleeves are comparable to a pin connection.

SECURED CONFIGURATION EXAMPLES
GPP5000IL / GPD5000IL SERIES

► GPP5000IL / GPD5000IL (IO-LINK) WIRING TO CONTROL CABINET (BECKHOFF)

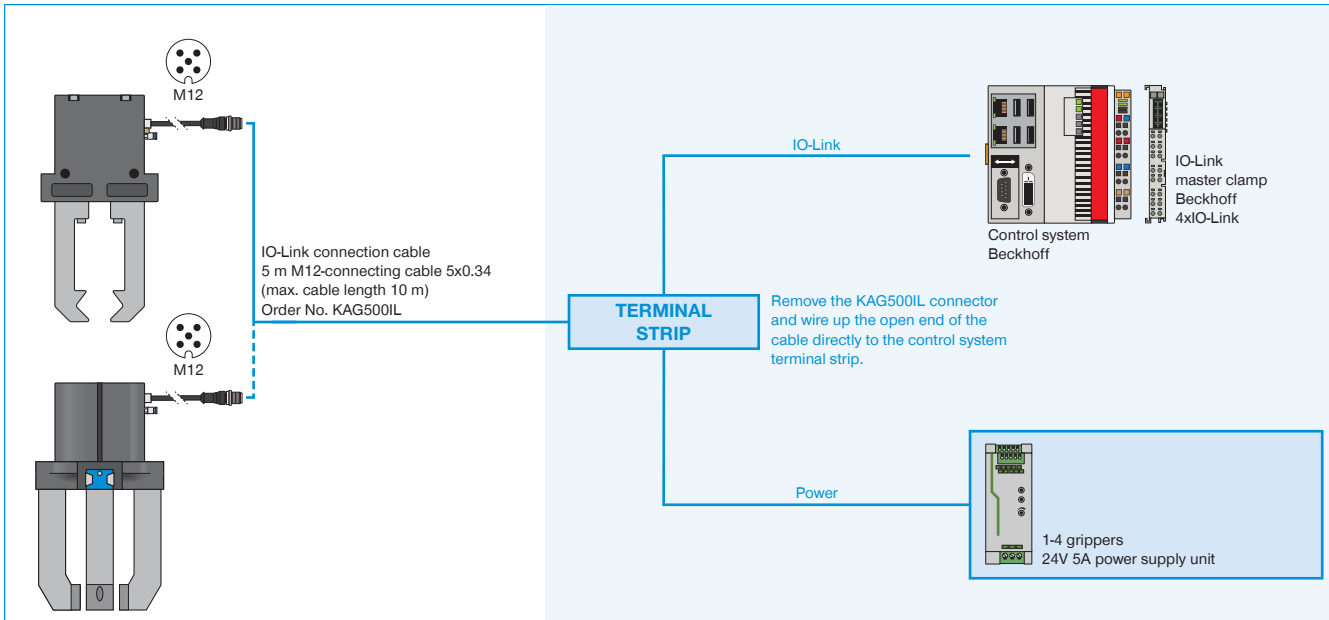

Deviation from the IO-Link Port Class B specification: There is no electrical isolation between the actuator and sensor voltage in the gripper. Electrical isolation from the point of view of the IO-Link master is possible with an optional Y-cable (order no. B12-Y-5IL).

► GPP5000IL / GPD5000IL (IO-LINK) WIRING TO CONTROL CABINET (SIEMENS)

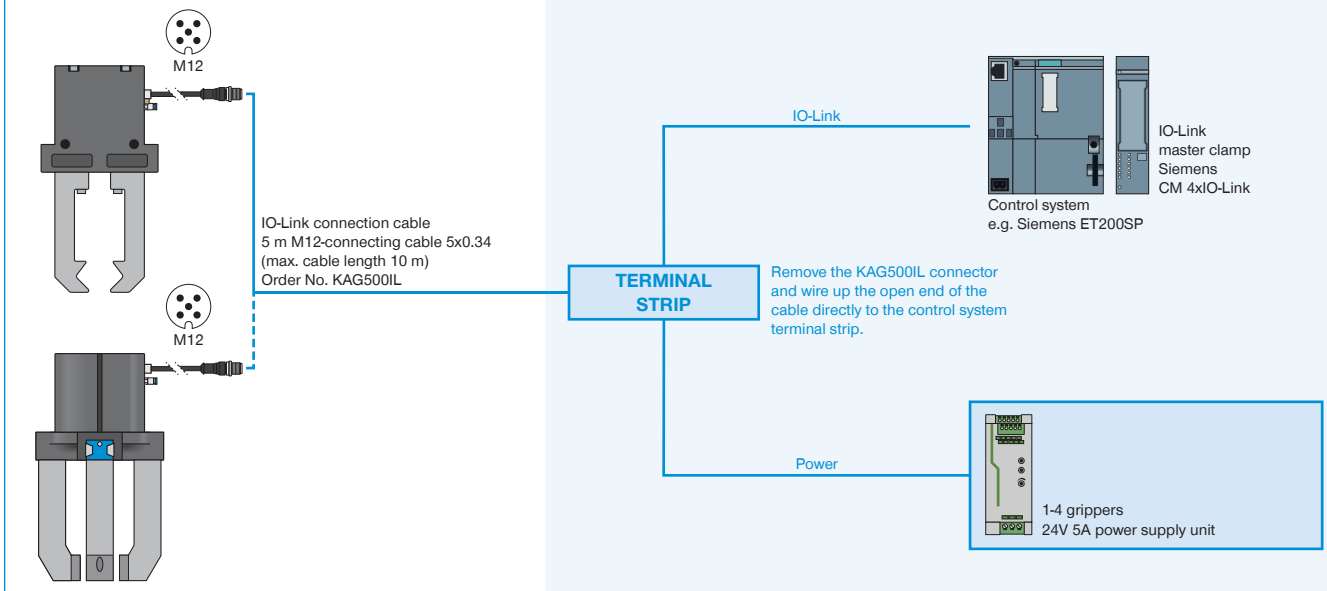

Deviation from the IO-Link Port Class B specification: There is no electrical isolation between the actuator and sensor voltage in the gripper. Electrical isolation from the point of view of the IO-Link master is possible with an optional Y-cable (order no. B12-Y-5IL).

▶ GPP5000IL / GPD5000IL (IO-LINK) WIRING TO IO-LINK MASTER IP67 (BECKHOFF)

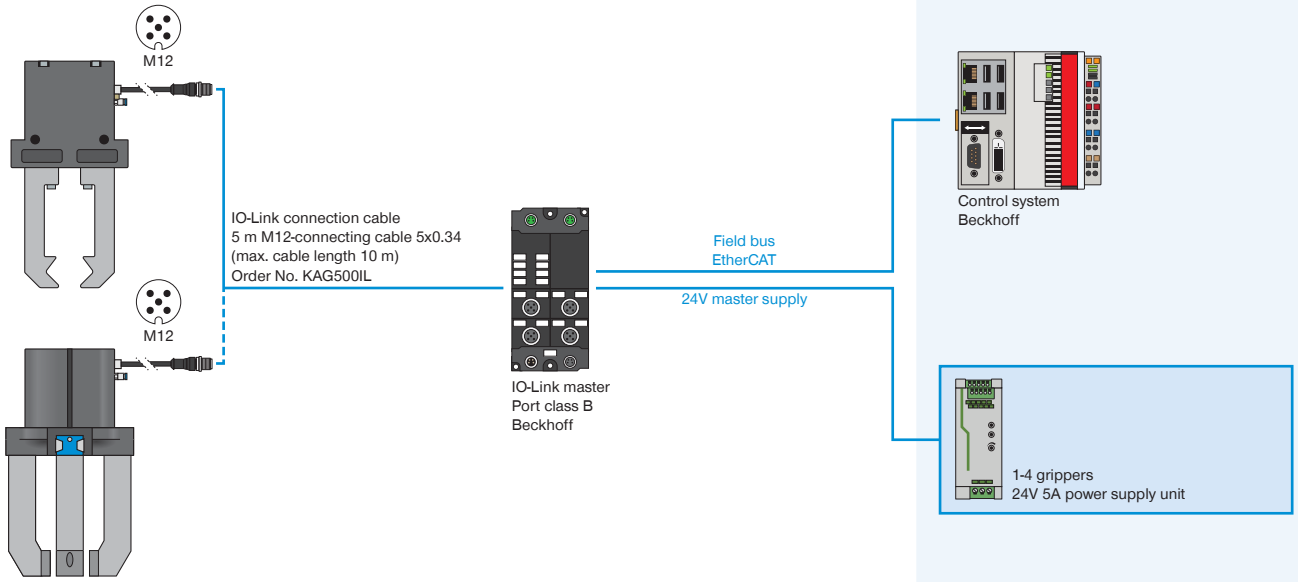

Deviation from the IO-Link Port Class B specification: There is no electrical isolation between the actuator and sensor voltage in the gripper. Electrical isolation from the point of view of the IO-Link master is possible with an optional Y-cable (order no. B12-Y-5IL).

▶ GPP5000IL / GPD5000IL (IO-LINK) WIRING TO IO-LINK MASTER IP67 (SIEMENS)

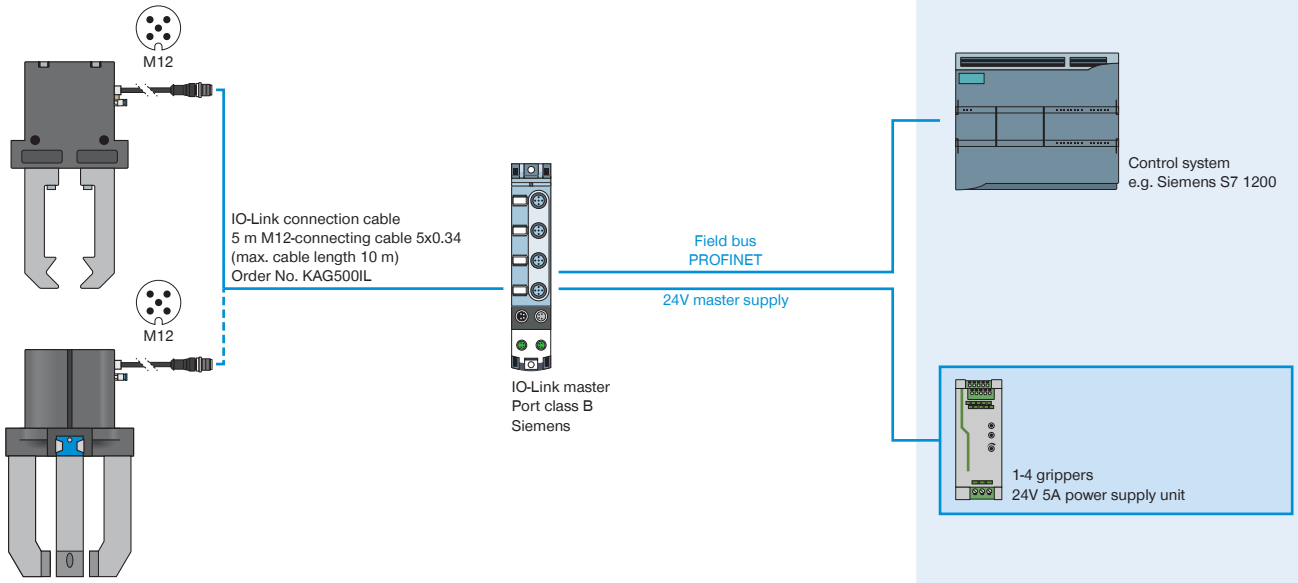

Deviation from the IO-Link Port Class B specification: There is no electrical isolation between the actuator and sensor voltage in the gripper. Electrical isolation from the point of view of the IO-Link master is possible with an optional Y-cable (order no. B12-Y-5IL).