2-JAW ANGULAR GRIPPERS
SERIES GPW5000

▶ PRODUCT ADVANTAGES

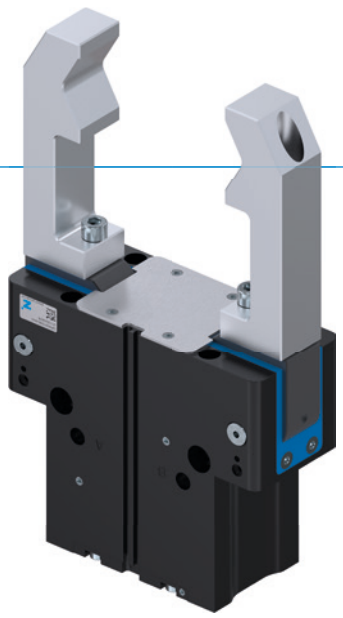

“The Universal One”

▶ **Highest performance with the smallest dimensions**

Features a one-of-a-kind ratio of net mass to gripper finger length and gripping moment. The performance of your machine is increased as a result.

▶ **Versatile applicability**

Thanks to standard functionality such as IP64 and corrosion protection, you are able to use these grippers in almost any of your applications. Even the toughest environments are no problem.

▶ **Robust and process-reliable**

Thanks to a maintenance-free design up to 30 million cycles and the most solid force transmission possible, process assurance is maximized.

▶ SERIES CHARACTERISTICS

Installation size	Base version	Variants	
GPW50XX	NC	-00	-20
Spring closing C	●	Basic equipment	High Temperature Version
30 million maintenance-free cycles (max.)	●		
Inductive sensor	●		
Magnetic field sensor	●		
Protected against corrosion	●		
Purged air	●		
IP64	●		
Temperature-resistant	●		

▶ BENEFITS IN DETAIL

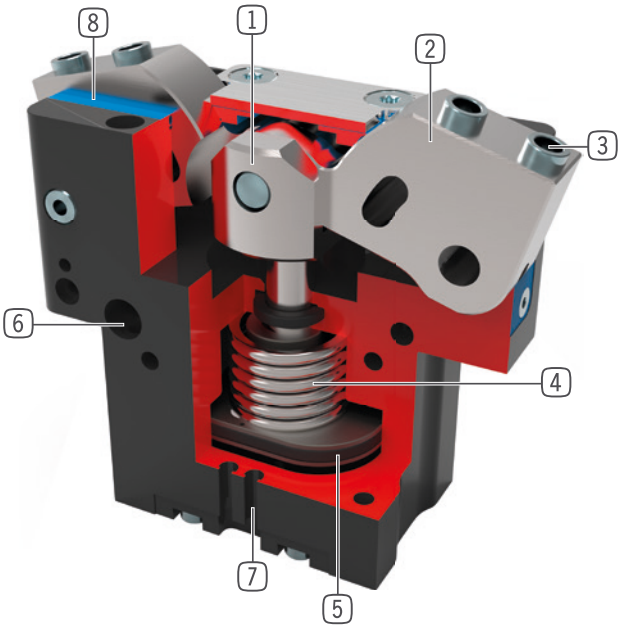

1 **Positively driven lever mechanism**
- synchronized the movement of the gripper jaws

2 **Gripper jaw**
- Gripper fingers mounted using removable centering sleeves

3 **Removable centering sleeves**
- quick and economical positioning of the gripper fingers

4 **Integrated gripping force safety device**
- Spring built into cylinder chamber as an energy store

5 **Drive**
- Double-acting pneumatic rotor cylinder

6 **Mounting and positioning**
- Alternatively, on several sides for customized mounting

7 **Sensing slot**
- mounting and positioning of magnetic field sensors

8 **Dual lip seal**
- IP64
- Prevents grease from being squeezed out, increasing service life

▶ TECHNICAL DATA

Installation size	Stroke per jaw (+/-) [°]	Gripping force [N]	Weight [kg]	IP class
GPW5008	+15/-2	1450	0.92	IP64
GPW5013	+15/-2	4200	3	IP64
GPW5025	+15/-2	14500	12	IP64

▶ FURTHER INFORMATION IS AVAILABLE ONLINE

All information just a click away at: www.zimmer-group.com. Find data, illustrations, 3D models and operating instructions for your installation size using the order number for your desired product. Quick, clear and always up-to-date.

2-JAW ANGULAR GRIPPERS
INSTALLATION SIZE GPW5008

▶ PRODUCT SPECIFICATIONS

▶ Gripping force diagram

Shows the arithmetic total of the individual forces that occur on the gripper fingers, depending on the gripper finger length

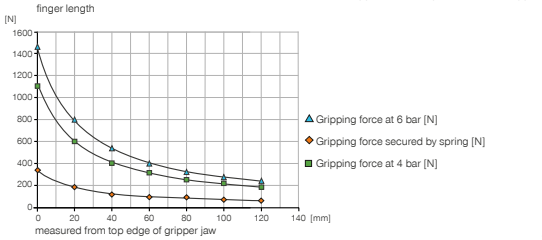

▶ Forces and moments

Displays static forces and moments that can also have an effect, besides the gripping force.

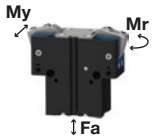

Mr [Nm]	65
My [Nm]	60
Fa [N]	1900

▶ TECHNICAL DATA

	▶ Technical data
Order no.	**GPW5008NC-00-A**
Stroke per jaw (+/-) [°]	+15/-2
Gripping moment in closing max. [Nm]	33
Gripping moment secured by spring min. [Nm]	7.5
Gripping force in closing at 0° [N]*	1450
Closing time [s]	0.1
Opening time [s]	0.17
Dead weight of mounted gripper finger max. [kg]	0.7
Length of the gripper fingers max. [mm]	115
Repetition accuracy +/- [mm]	0.01
Operating pressure [bar]	4 ... 8
Nominal operating pressure [bar]	6
Operating temperature [°C]	-10 ... +90
Air volume per cycle [cm³]	35
Certifications	LABS / REACH / RoHS
Protection to IEC 60529	IP64
Weight [kg]	0.92

*measured from top edge of gripper jaw

	▶ Technical Data - High Temperature Version
Order no.	**GPW5008NC-20-A**
Operating temperature [°C]	-10 ... +130

▶ TECHNICAL DRAWINGS

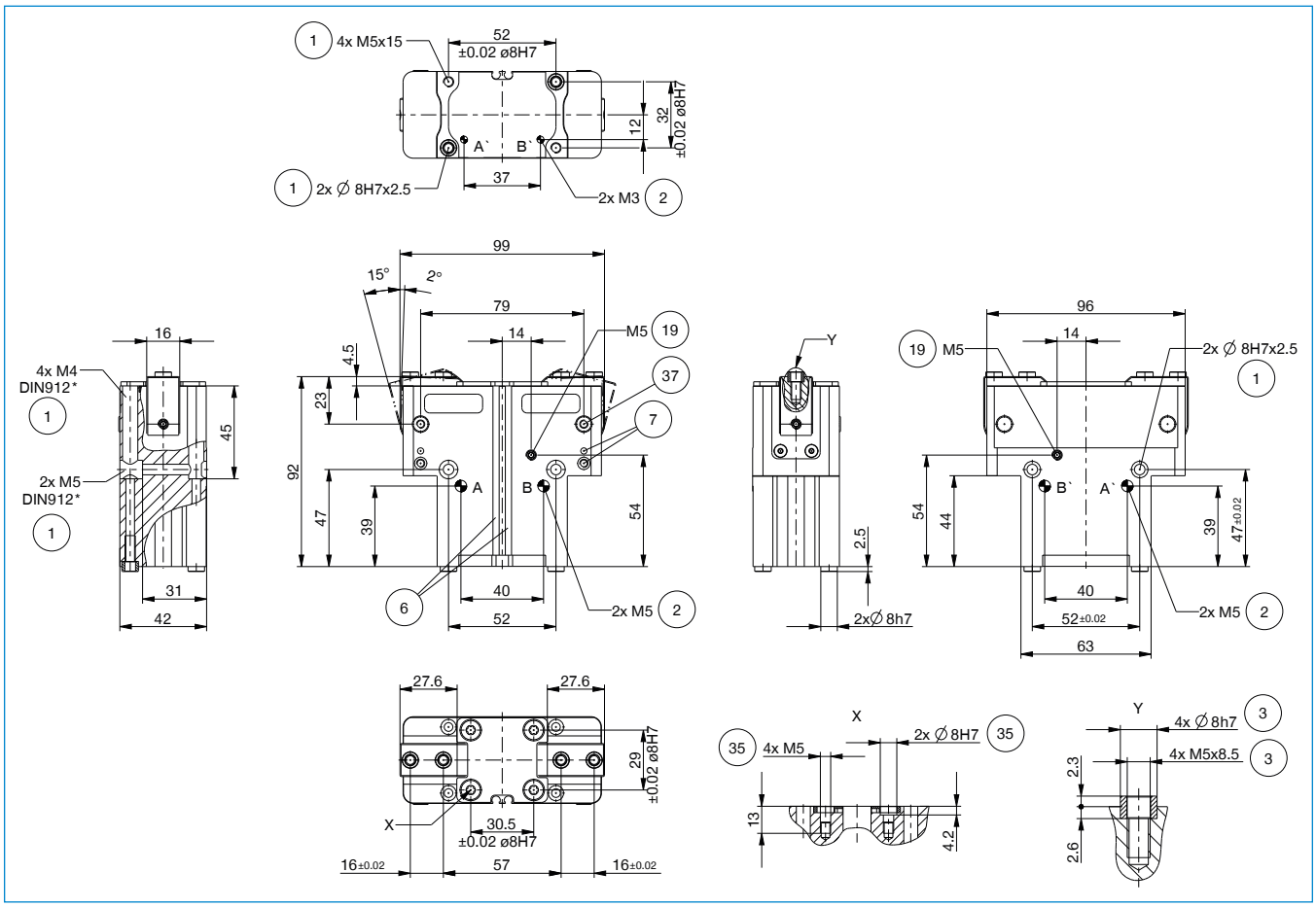

① Gripper attachment
② Energy supply
③ Fixing for gripper finger
⑥ Integrated slot for magnetic field sensor
⑦ Fixing for mounting block
⑲ Air purge connection option
㉟ Mounting posibillity for stroke adjustment screwe
㊲ Mounting posibillity for cam switch
㊳ Adapter
㊴ Gripper
Ⓐ Air connection (close)
Ⓑ Air connection (open)
Ⓐ' Air connection, alternative (close)
Ⓑ' Air connection, alternative (open)

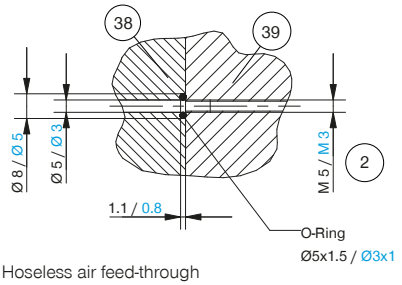

Hoseless air feed-through

2-JAW ANGULAR GRIPPERS
INSTALLATION SIZE GPW5008

▶ ACCESORIES

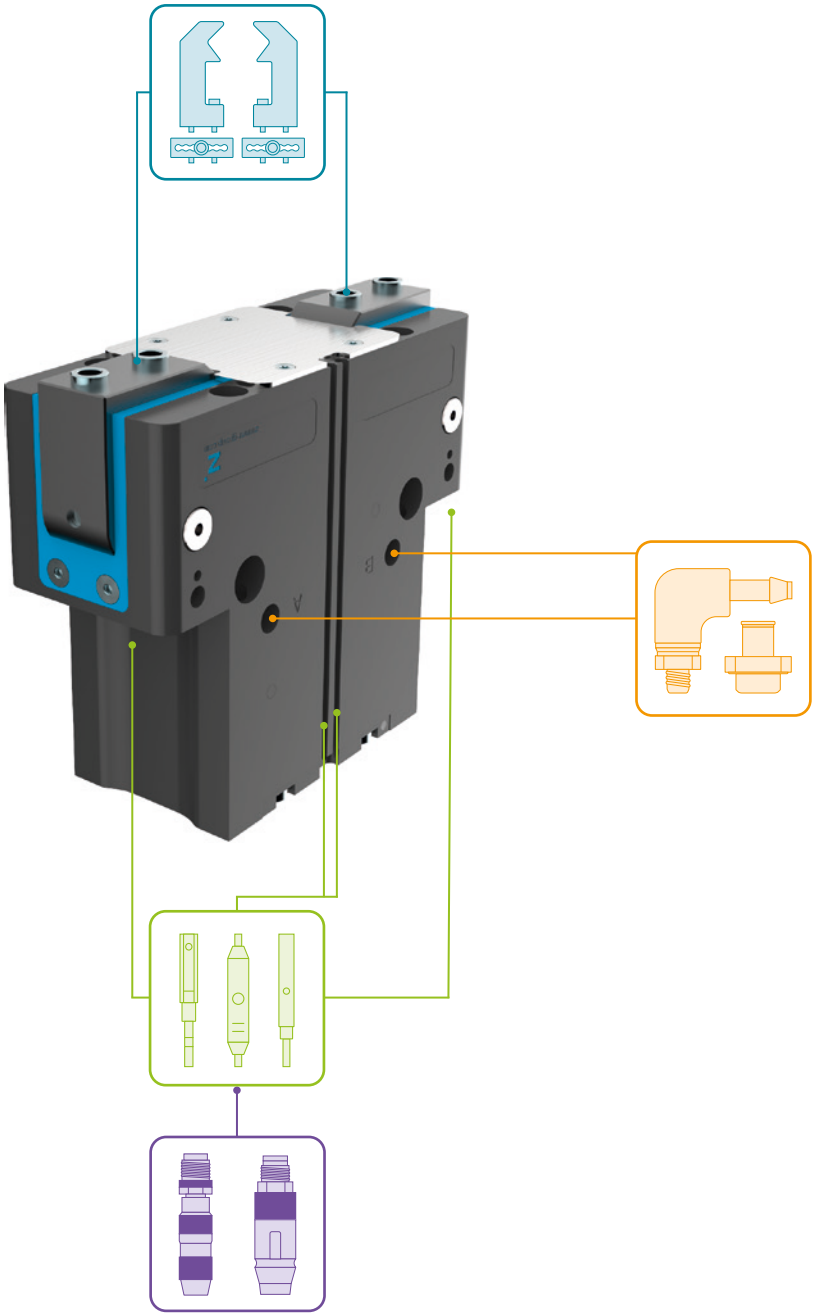

▶ INCLUDED IN DELIVERY

6 [piece]
Centering Disc

024231

▶ RECOMMENDED ACCESSORIES

GRIPPING COMPONENTS

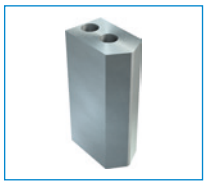

UB5008AL
Universal jaw aluminium

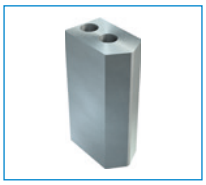

UB5008ST
Universal jaw steel

EB5008AL
Aluminum adjustment jaw

EB5008ST
Steel adjustment jaw

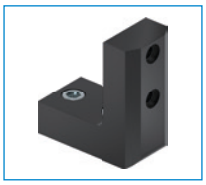

LB5008
L-jaw

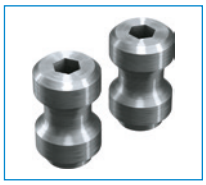

WB5008L
Changeable jaw, loose part set

WB5008F
Changeable jaw, fixed part

ENERGY SUPPLY

WVM5
Angled Fittings - Quick Connect Style

DSV1-8
Pressure safety valve

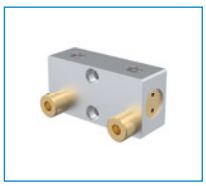

DSV1-8E
Pressure safety valve with quick exhaust

SENSORS

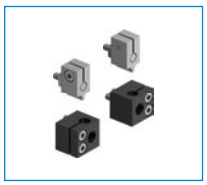

ANS0084
Attachment Kit for Inductive Proximity Switch

NJ8-E2S
Inductive proximity switch – M8

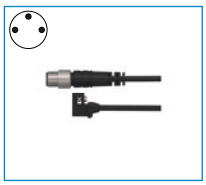

MFS01-S-KHC-P1-PNP
Magnetic field sensor angled, cable 0.3 m - M8 connector

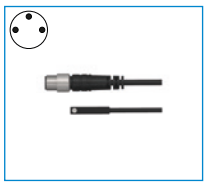

MFS02-S-KHC-P1-PNP
Magnetic field sensor straight, cable 0.3 m - M8 connector

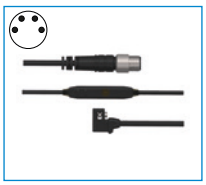

MFS01-S-KHC-P2-PNP
2-point sensor angled, cable 0.3 m - M8 connector

MFS02-S-KHC-P2-PNP
2-point sensor straight, cable 0.3 m - M8 connector

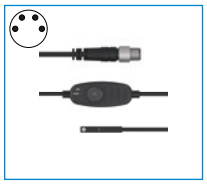

MFS02-S-KHC-IL
Straight position sensor, cable 0.3 m – M8 plug

2-JAW ANGULAR GRIPPERS
SERIES GPW5000 FUNCTIONAL DESCRIPTION

GRIPPING COMPONENTS

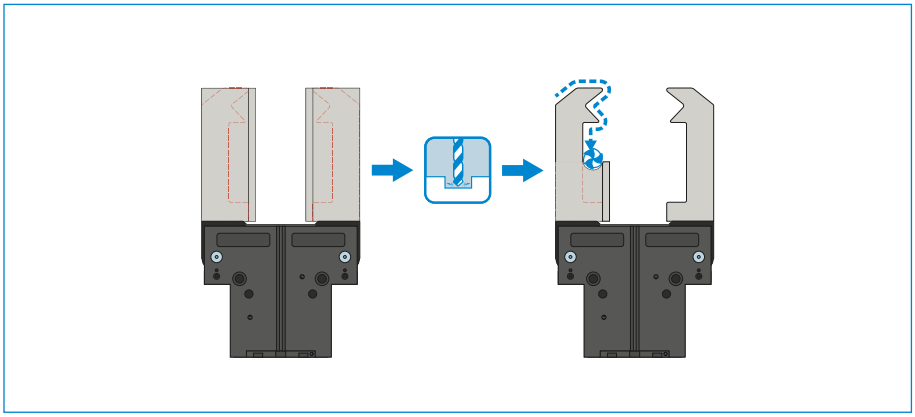

Universal jaws – UB5000

Can be used immediately or for individual reprocessing

The gripper blanks are available in aluminum (AL) and steel (ST) versions and are installed directly on the gripper using the screws in the scope of delivery. The fits for the centering sleeves are already in place for this purpose. One universal jaw is required for each gripper jaw.

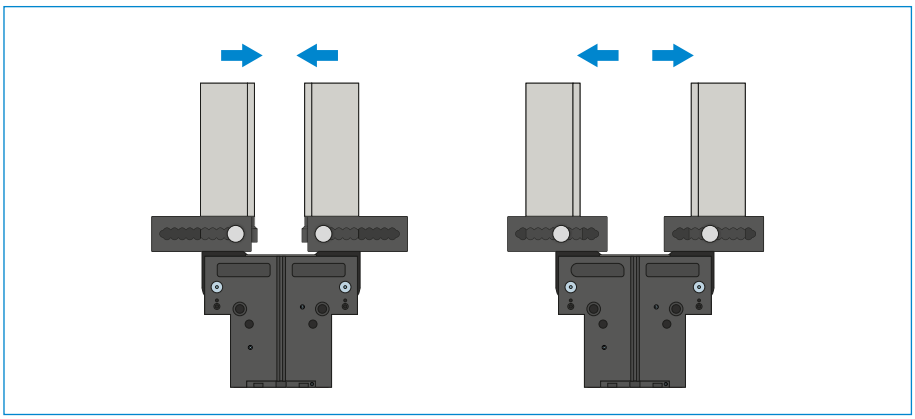

Adjustment jaws – EB5000

For tool-free adaptation of the gripper range

By manually activating the locking mechanism, which is pre-tensioned by a spring, the adjustment jaw can be moved within a grid of detent notches that has a number scale. Depending on the forces and torques that apply, the adjustment jaws are available in aluminum (AL) and steel (ST) versions. One adjustment jaw is required for each gripper jaw.

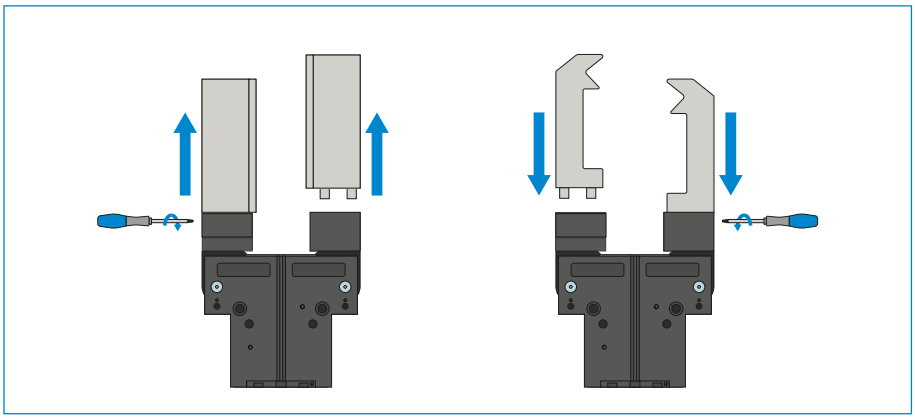

Interchangeable jaws – WB5000

Enable fast change of individual gripper fingers

For each gripper jaw, a fixed part and at least one loose part set is needed, depending on the number of gripper fingers to be changed. Manual locking via the Torx wrench included in the scope of delivery of the fixed part can take place from two sides.

GRIPPING COMPONENTS

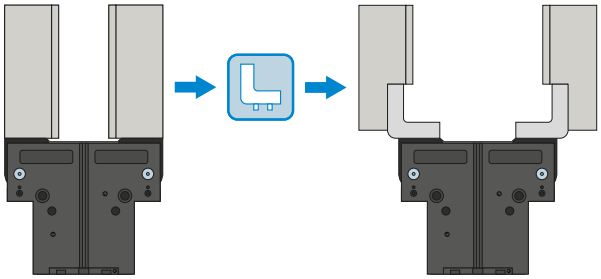

L-gripper jaw – LB5000
Fast and easy method for adapting and installing the gripper fingers on the sides.

THE GRIPPING COMPONENTS CAN BE COMBINED!

The gripper components listed above can be combined with each other and are compatible with the various series of the 5000 gripper family.

ENERGY SUPPLY

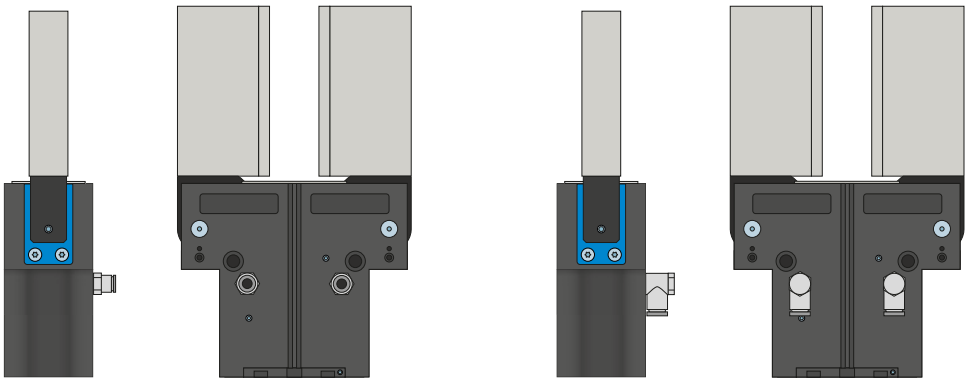

Pneumatic threaded connections
Available in straight and angled design. Can be chosen freely depending on the space conditions or installation situation.

2-JAW ANGULAR GRIPPERS
SERIES GPW5000 FUNCTIONAL DESCRIPTION

ENERGY SUPPLY

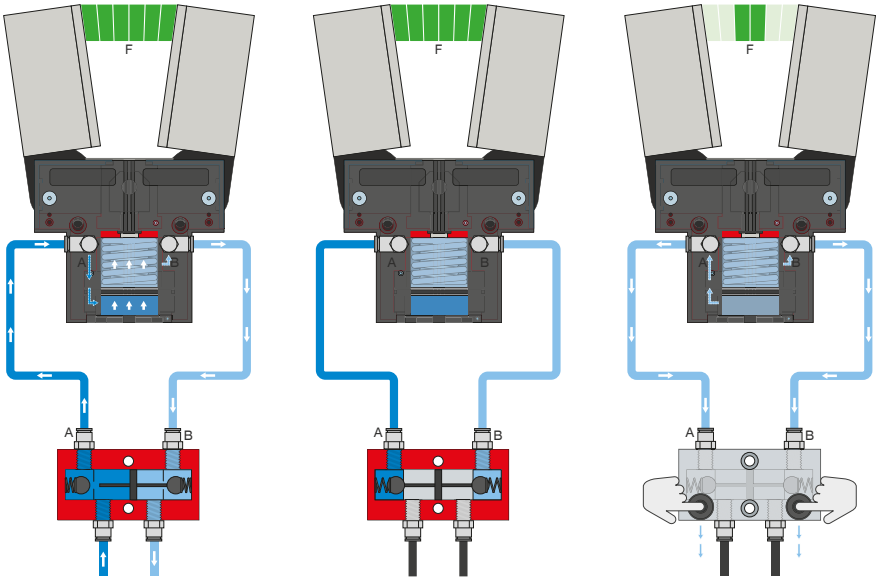

Pressure safety valve – DSV

Ensures safe retention of force and position if the system pressure drops

The integrated double check valve, which can be unlocked, retains the system pressure of the gripper in case of EMERGENCY STOP. To ensure the function, the valve must be installed as close to the gripper's air connection as possible. In variant E, two pushbuttons are installed that allow for controlled bleeding of the gripper.

SENSORS

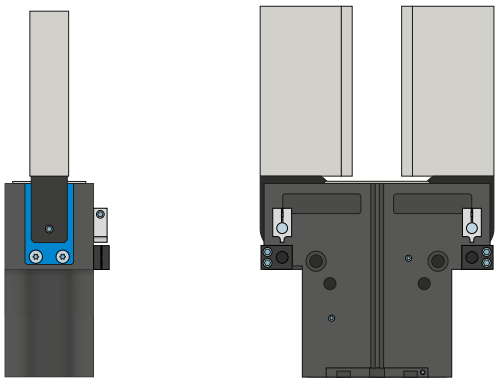

Attachment kit

The attachment kit is installed on the gripper using the fastening material included in the scope of delivery. The attachment kit enables sensing of the gripper positions via inductive proximity switches.

SENSORS

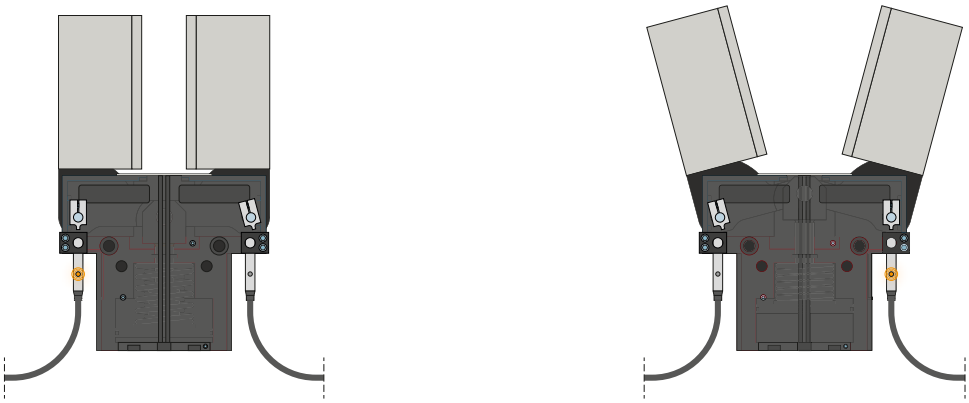

Inductive sensors – NJ

For direct position sensing of the gripper jaws

The sensor is guided into the intake as far as it will go and fixed in place using the lateral clamping screw. Tuning to the desired position then takes place by adjusting the cam switch. The sensors are available in versions with 5 m cables with exposed leads and 0,3 m cable with male connector, as well as with direct male connector orientation.

2-JAW ANGULAR GRIPPERS
SERIES GPW5000 FUNCTIONAL DESCRIPTION

SENSORS

MFS02

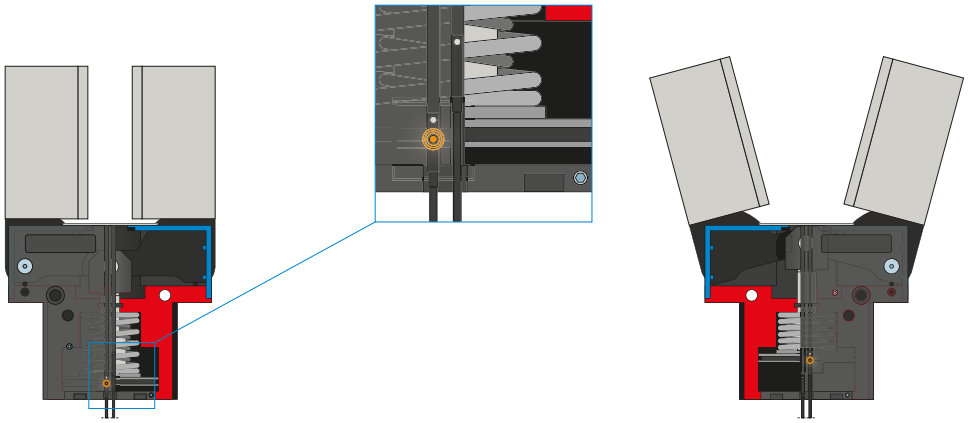

MFS01

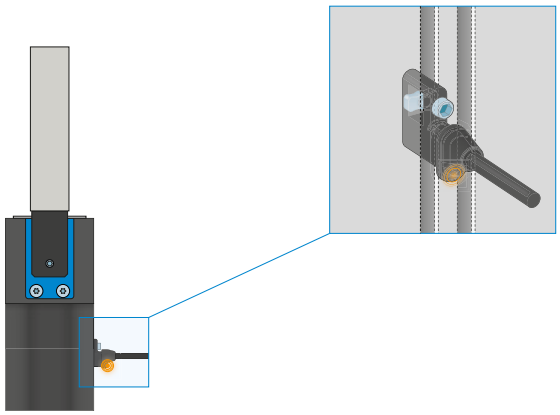

1-point magnetic field sensors – MFS

For non-contact sensing of the piston position

These sensors are installed in the C-groove of the gripper and detect the magnet attached to the piston of the gripper. To ensure use in a wide variety of space conditions, the sensors are available in two variants. While the horizontal MFS02, with straight cable outlet, disappears into the C-groove of the gripper almost completely, the vertical MFS01 is taller, but has a cable outlet that is offset at an angle of 90°. The variants are available in versions with 5 m cables with exposed leads and 0,3 m cable with connector.

SENSORS

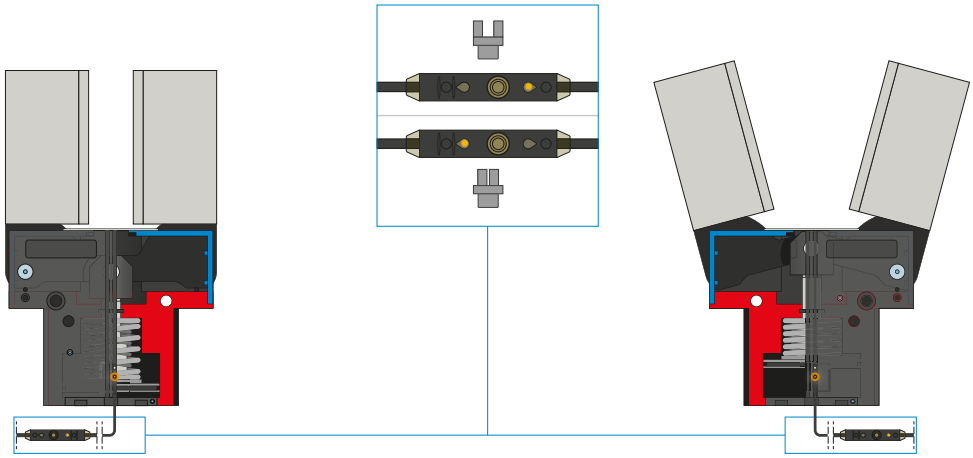

2-point magnetic field sensors – MFS

With two freely programmable switching points

Using the programming unit integrated in the cable, two switch points can be freely defined for this sensor. To do so, the sensor is clamped in the C-groove, the gripper approaches position one and the position is taught in using the teach button. Afterwards, the second position is approached with the gripper and programmed. To ensure use in a wide variety of space conditions, the sensors are available in two variants. While the horizontal MFS02, with straight cable outlet, disappears into the C-groove of the gripper almost completely, the vertical MFS01 is taller, but has a cable outlet that is offset at an angle of 90°. The sensors are available in versions with 5 m cables with exposed leads and 0,3 m cable with connector.

CONNECTIONS / OTHER

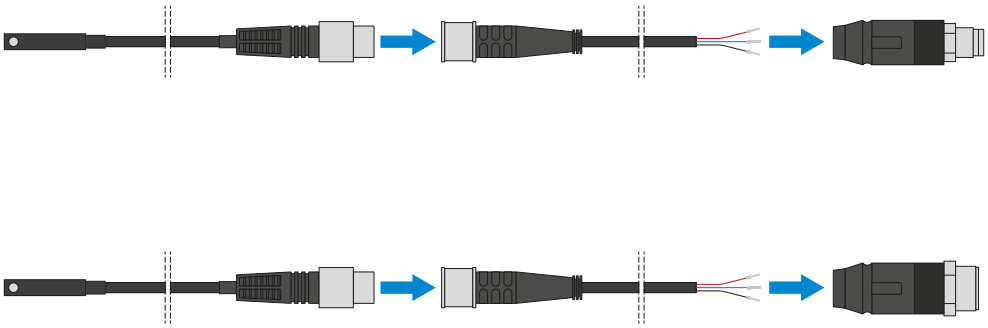

Plug-in connectors

For extending and fabricating the connection lines for the sensors

Cables with a length of 5 m with exposed leads are available. Depending on the specific needs, the cables can be shortened or fabricated with connectors in sizes M8 and M12.

CONNECTIONS / OTHER

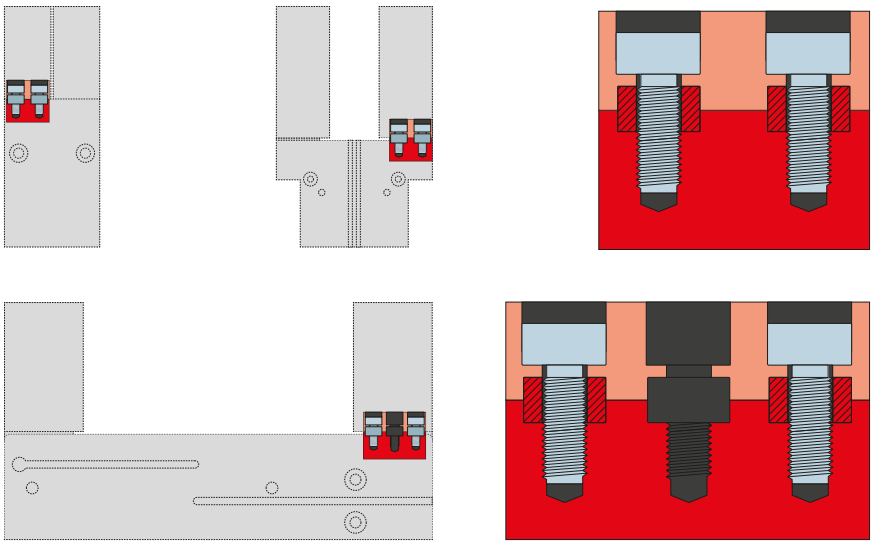

Centering sleeves

For defined position measurement of the gripper fingers

The centering sleeves are inserted into the fits of the gripper jaws to define the position of the gripper fingers. The centering sleeves are comparable to a pin connection.