2-JAW PARALLEL GRIPPERS
HRC-03-151986

▶ PRODUCT SPECIFICATIONS

▶ Gripping force diagram

Shows the arithmetic total of the individual forces that occur on the gripper fingers, depending on the gripper finger length

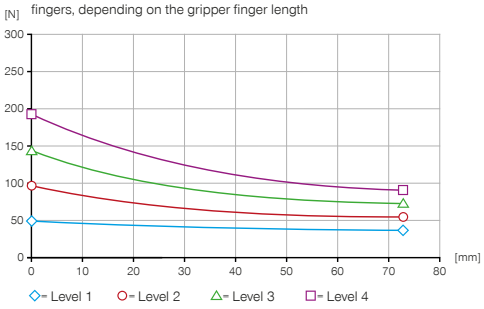

▶ Forces and moments

Displays static forces and moments that can also have an effect, besides the gripping force.

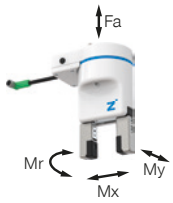

Mr [Nm]	7
Mx [Nm]	7
My [Nm]	5.5
Fa [N]	200

▶ TECHNICAL DATA

	▶ Technical data
Order no.	**HRC-03-151986**
Suitable for robot type	ABB CRB 15000 GoFa
MRK design according to ISO/TS 15066	Yes
HRC form	collaborative
Cable management	internal
Type of drive	electrical
Control	I/O
Position sensing	integrated
Position query magnetic field	Yes
Switching output	PNP
Stroke per jaw [mm]	10
Self locking mechanism	mechanical
Nominal gripping force [N]	190
Gripping force in accordance with ISO/TS 15066 [N]*	<140
Grip direction	External / internal gripping
Closing time [s]	0.19
Opening time [s]	0.19
Control time [s]	0.03
Dead weight of mounted gripper finger max. [kg]	0.1
Length of the gripper fingers max. [mm]	80
Repetition accuracy +/- [mm]	0.05
Operating temperature [°C]	5 ... +50
Voltage [V]	24
Current consumption max. [A]	1
Minimum positioning path per jaw [mm]	0.5
Certifications	CE / UKCA / LABS / REACH / RoHS
Protection to IEC 60529	IP40
Weight [kg]	0.68

*Value based on the parameters described in the ISO/TS 15066, determined with a force measuring device certified by the DGUV (German Social Accident Insurance)

▶ RECOMMENDED ACCESSORIES

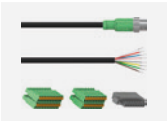

ZUB000034
Connecting cable
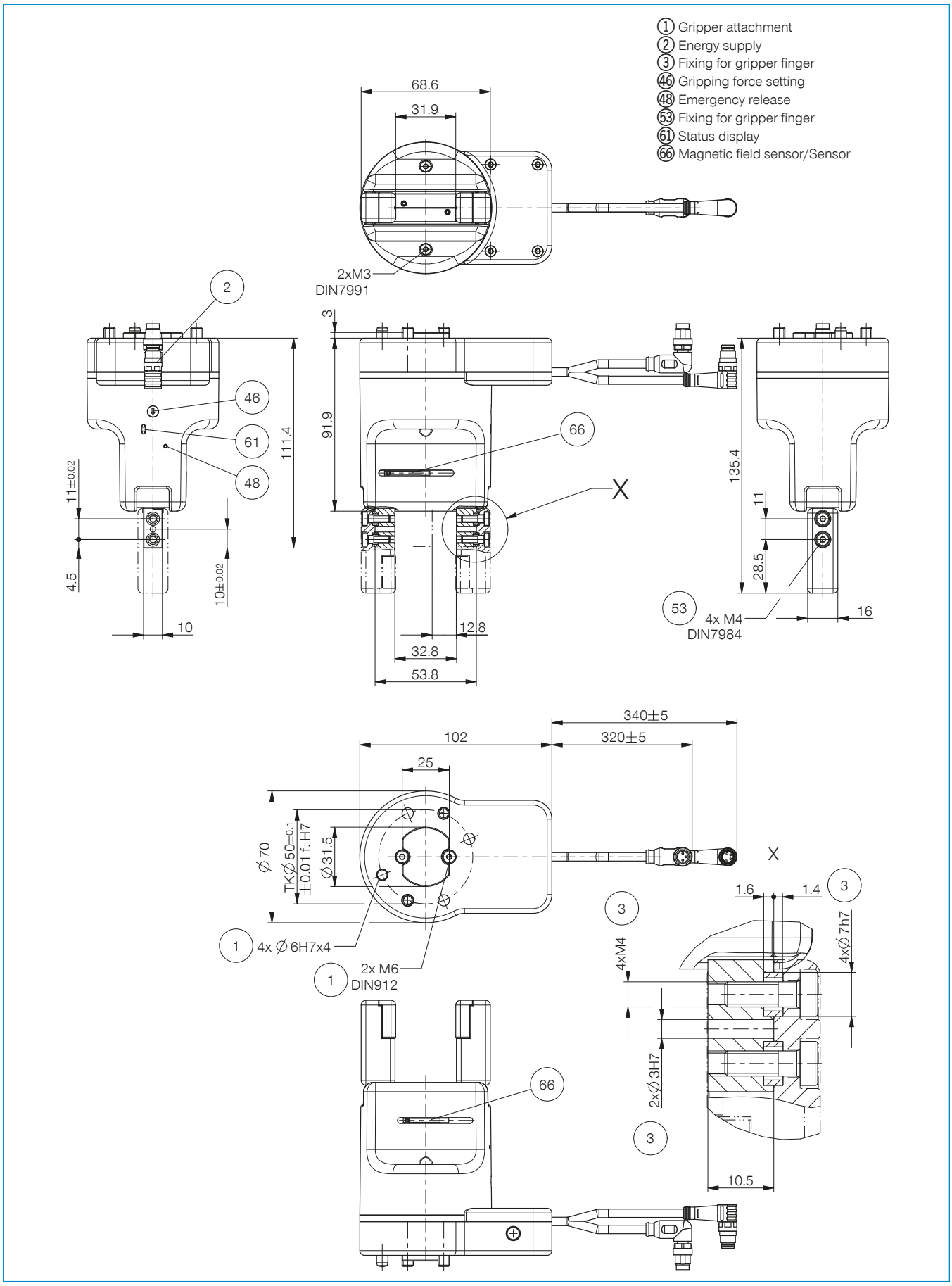
▶ TECHNICAL DRAWINGS