3-JAW CONCENTRIC GRIPPERS
SERIES MGD800

▶ PRODUCT ADVANTAGES

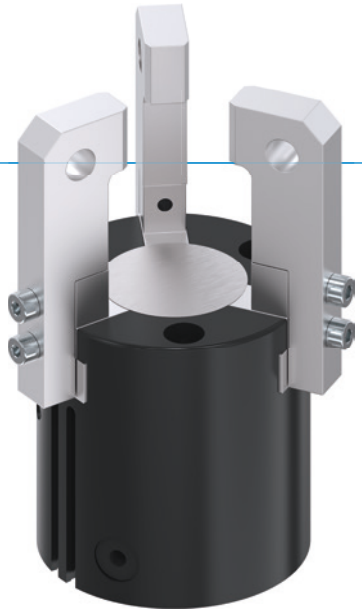

“The superior”

- **Gripper jaws may be almost 100% longer in comparison to the benchmark**

  The highest force and torque measurement enables flexible for maximum dynamics

- **Best price/performance ratio**

  Reduces your investment costs and speeds the ROI for your application

- **Failure-free continuous operation**

  Our uncompromising “Made in Germany” quality guarantees up to 10 million maintenance-free cycles

▶ SERIES CHARACTERISTICS

Installation size	Version	
MGD8XX	N	NC
Spring closing C		●
10 million maintenance-free cycles (max.)	●	●
Magnetic field sensor	●	●
Cleanroom-certified	●	●
IP40	●	●

▶ BENEFITS IN DETAIL

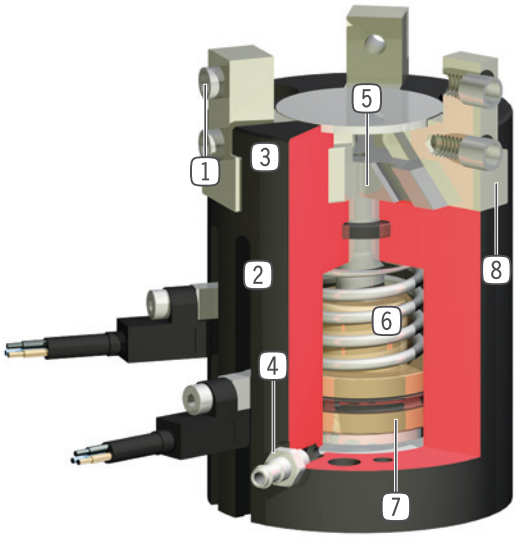

1 **Removable centering sleeves**
- quick and economical positioning of the gripper fingers

2 **Sensing slot**
- mounting and positioning of magnetic field sensors

3 **Robust, lightweight housing**
- Hard-coated aluminum alloy

4 **Energy supply**
- possible from several sides

5 **Wedge hook mechanism**
- synchronized the movement of the gripper jaws

6 **Integrated gripping force safety device**
- spring integrated into cylinder as energy storage (from size 803 upwards)

7 **Position sensing**
- permanent magnet for direct monitoring of piston movement

8 **Precise T-Slot guide**
- high forces and moments capacity

▶ TECHNICAL DATA

Installation size	Stroke per jaw [mm]	Gripping force [N]	Weight [kg]	IP class
MGD801	1	30 - 34	0,025	IP40
MGD802	2	40 - 45	0,05	IP40
MGD803	3	78 - 110	0,08 - 0,115	IP40
MGD804	4	125 - 160	0,14 - 0,18	IP40
MGD806	6	240 - 295	0,26 - 0,35	IP40
MGD808	8	415 - 560	0,47 - 0,65	IP40
MGD810	10	740 - 920	0,98 - 1,16	IP40
MGD812	12	1130 - 1420	1,67 - 2	IP40

▶ FURTHER INFORMATION IS AVAILABLE ONLINE

All information just a click away at: www.zimmer-group.com. Find data, illustrations, 3D models and operating instructions for your installation size using the order number for your desired product. Quick, clear and always up-to-date.

3-JAW CONCENTRIC GRIPPERS
INSTALLATION SIZE MGD812

▶ PRODUCT SPECIFICATIONS

▶ Gripping force diagram

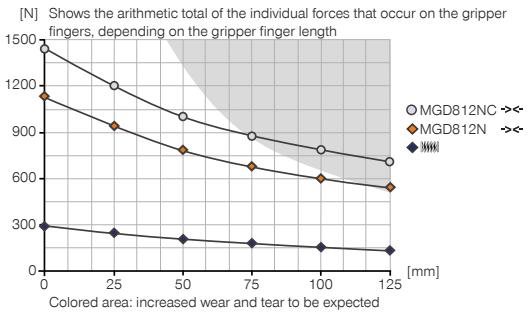

▶ Forces and moments

Displays static forces and moments that can also have an effect, besides the gripping force.

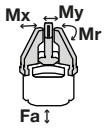

Mr [Nm]	41
Mx [Nm]	45
My [Nm]	65
Fa [N]	1500

▶ INCLUDED IN DELIVERY

6 [piece]
Centering Disc
DST41000

▶ RECOMMENDED ACCESSORIES

ENERGY SUPPLY

GV1-8X8
Straight Fittings - Quick Connect Style

DEV08
Quick Exhaust Valve

DSV1-8
Pressure safety valve

DSV1-8E
Pressure safety valve with quick exhaust

SENSORS

MFS01-S-KHC-P1-PNP
Magnetic field sensor angled, cable 0.3 m - M8 connector

MFS02-S-KHC-P1-PNP
Magnetic field sensor straight, cable 0.3 m - M8 connector

MFS02-S-KHC-IL
Straight position sensor, cable 0.3 m – M8 plug

	► Technical data	
Order no.	**MGD812N**	**MGD812NC**
Stroke per jaw [mm]	12	12
Gripping force in closing [N]	1130	1420
Gripping force in opening [N]	1200	
Closing time [s]	0.12	0.12
Opening time [s]	0.12	0.17
Repetition accuracy +/- [mm]	0.02	0.02
Operating pressure min. [bar]	3	4
Operating pressure max. [bar]	8	8
Nominal operating pressure [bar]	6	6
Operating temperature min. [°C]	+5	+5
Operating temperature max. [°C]	+80	+80
Air volume per cycle [cm³]	69	97
Clean room applications according to DIN EN ISO 14644-1	6	6
Certifications	LABS / REACH / RoHS	LABS / REACH / RoHS
Protection to IEC 60529	IP40	IP40
Weight [kg]	1.7	1.9

NC

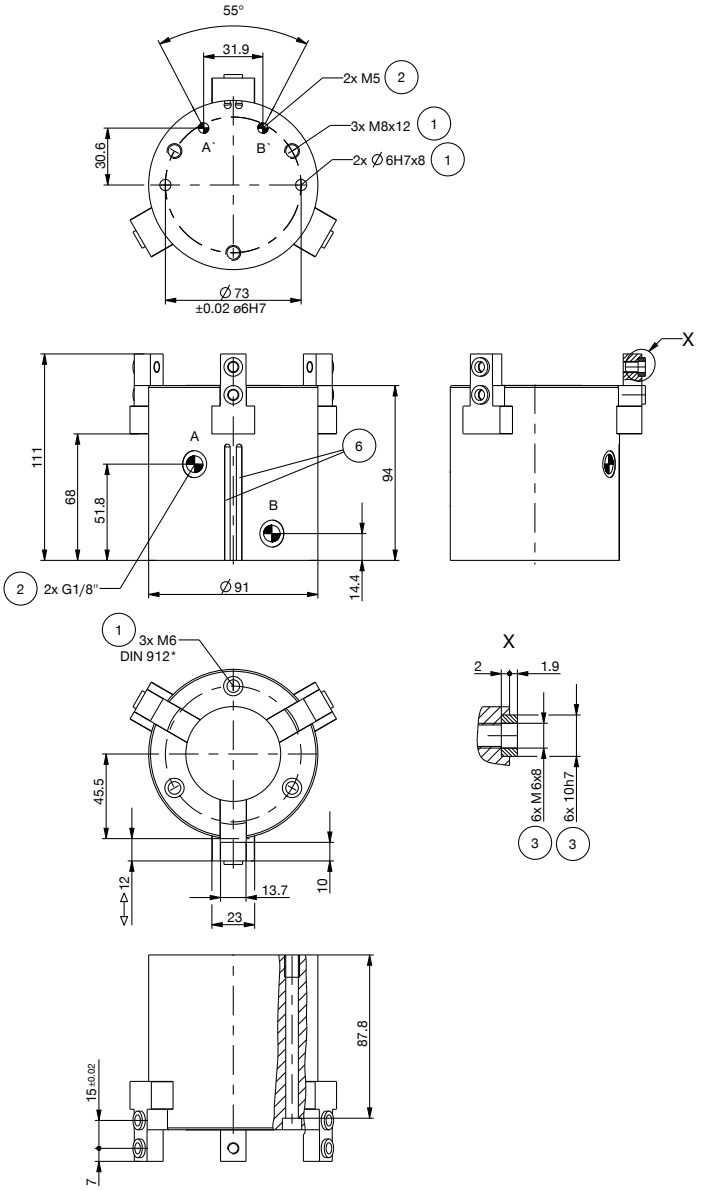

1 Gripper attachment
2 Energy supply
3 Fixing for gripper finger
6 Integrated slot for magnetic field sensor
38 Adapter
39 Gripper
A Air connection (close)
B Air connection (open)
A' Air connection, alternative (close)
B' Air connection, alternative (open)

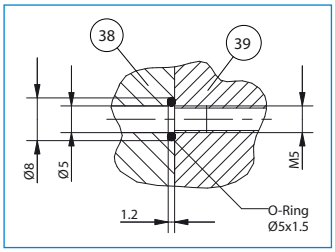

Hoseless air feed-through

N

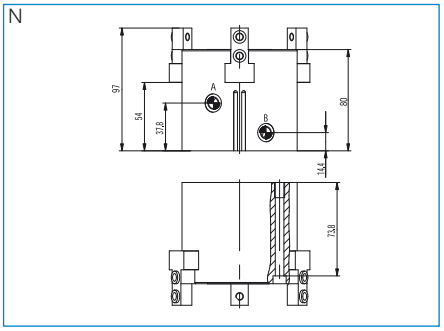

3-JAW CONCENTRIC GRIPPERS
SERIES MGD800 FUNCTIONAL DESCRIPTION

ENERGY SUPPLY

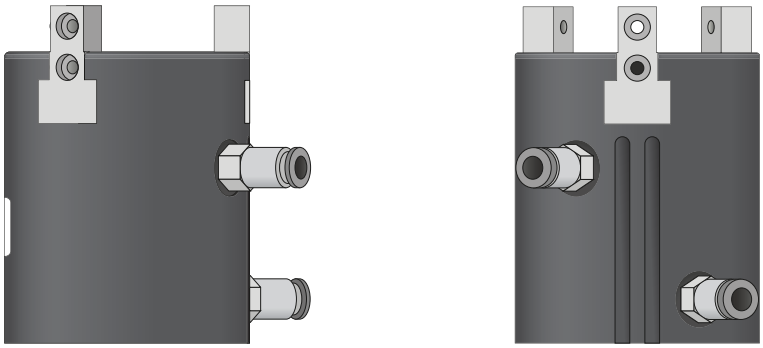

Pneumatic threaded connections

Available in straight and angled design. Can be chosen freely depending on the space conditions or installation situation.

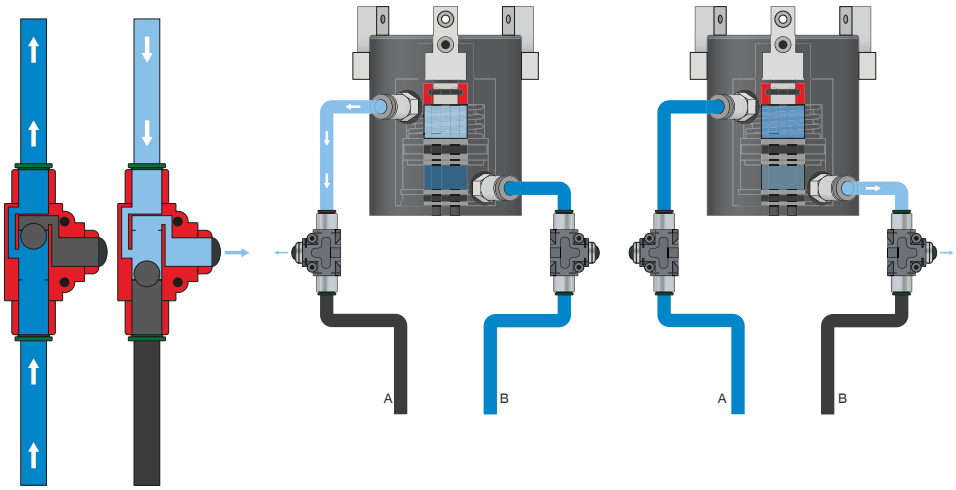

Quick exhaust valve – DEV

For rapid bleeding of the compressed air and preventing back pressure

The inline valves make a faster cycle time possible and prevent the formation of condensate in grippers with a small cylinder volume. To ensure the function, the valve must be installed as close to the gripper's air connection as possible.

ENERGY SUPPLY

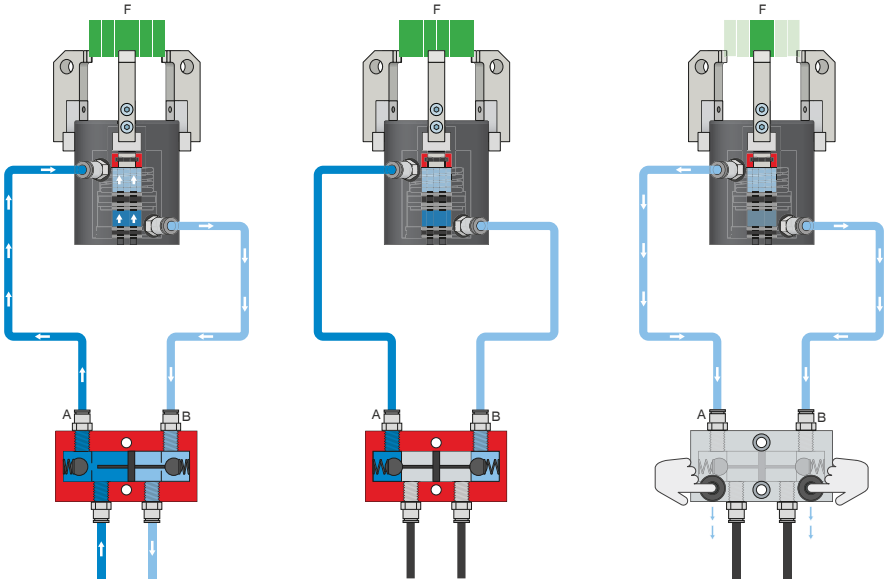

Pressure safety valve – DSV

Ensures safe retention of force and position if the system pressure drops

The integrated double check valve, which can be unlocked, retains the system pressure of the gripper in case of EMERGENCY STOP. To ensure the function, the valve must be installed as close to the gripper's air connection as possible. In variant E, two pushbuttons are installed that allow for controlled bleeding of the gripper.

3-JAW CONCENTRIC GRIPPERS
SERIES MGD800 FUNCTIONAL DESCRIPTION

SENSORS

MFS02

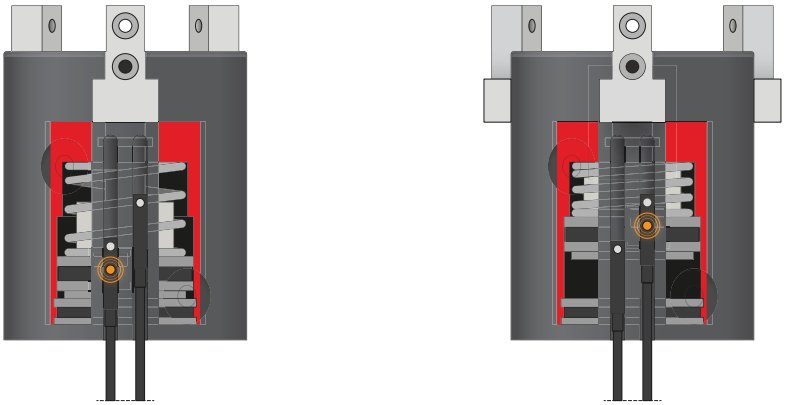

MFS01

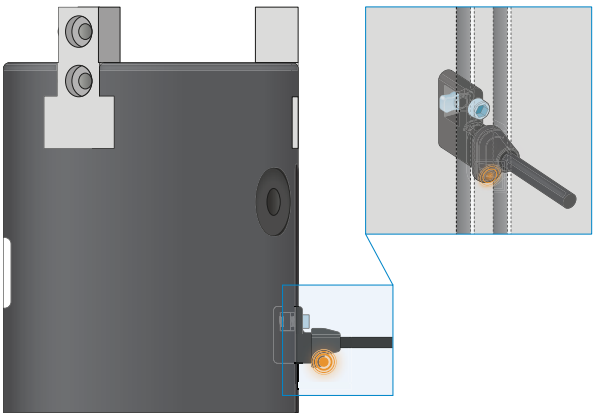

1-point magnetic field sensors – MFS

For non-contact sensing of the piston position

These sensors are installed in the C-groove of the gripper and detect the magnet attached to the piston of the gripper. To ensure use in a wide variety of space conditions, the sensors are available in two variants. While the horizontal MFS02, with straight cable outlet, disappears into the C-groove of the gripper almost completely, the vertical MFS01 is taller, but has a cable outlet that is offset at an angle of 90°. The variants are available in versions with 5 m cables with exposed leads and 0,3 m cable with connector.

CONNECTIONS / OTHER

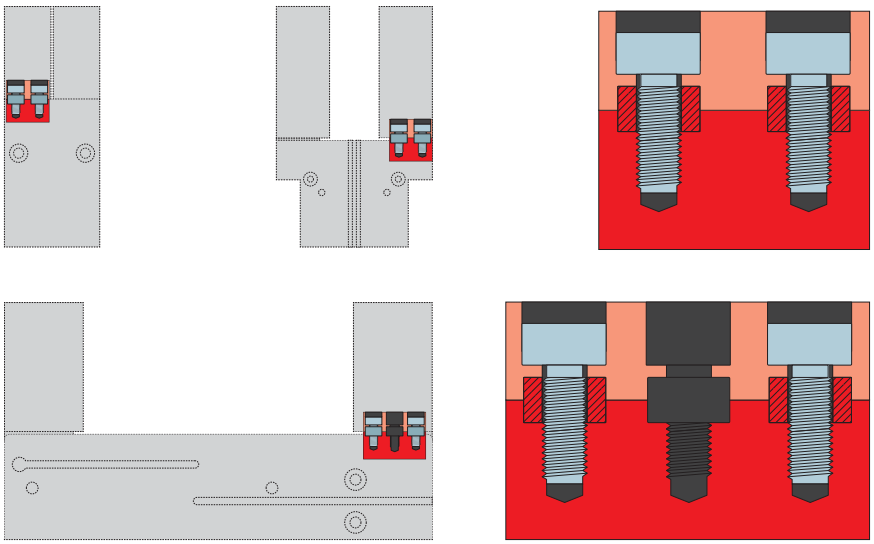

Centering sleeves

For defined position measurement of the gripper fingers

The centering sleeves are inserted into the fits of the gripper jaws to define the position of the gripper fingers. The centering sleeves are comparable to a pin connection.