2-JAW PARALLEL GRIPPERS WITH LONG STROKE
SERIES MGH8000

▶ PRODUCT ADVANTAGES

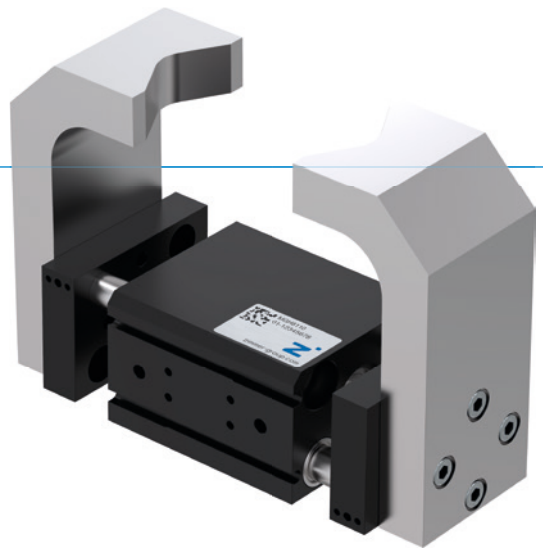

“The compact”

- **Reduced interference contours**

  Low-profile designs and versatile screw connection options enable simple integration into your design

- **Dirt protection**

  Using the scrapers on the guides, you can reliably use the gripper even under the harshest conditions

- **Failure-free continuous operation**

  Our uncompromising “Made in Germany” quality guarantees up to 10 million maintenance-free cycles

▶ SERIES CHARACTERISTICS

	Installation size
	MGH80XX
10 Mio 10 million maintenance-free cycles (max.)	●
Inductive sensor	●
Magnetic field sensor	●
IP 54 IP54	●

▶ BENEFITS IN DETAIL

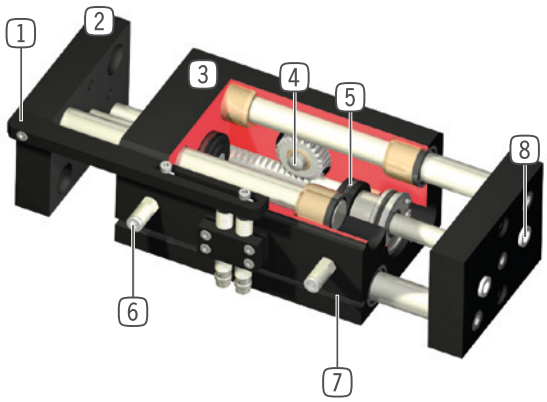

1 **Attachment kit (cam switch and clamping block)**
- for sensing position by means of proximity switch (optional feature)

2 **Gripper jaw**
- individual gripper finger mounting

3 **Robust, lightweight housing**
- Hard-coated aluminum alloy

4 **Synchronization**
- via rack and pinion

5 **Drive**
- two double-acting pneumatic cylinders

6 **Energy supply**
- possible from several sides

7 **Integrated groove**
- mounting and positioning of magnetic field sensors

8 **Removable centering sleeves**
- quick and economical positioning of the gripper fingers

▶ TECHNICAL DATA

Installation size	Stroke per jaw [mm]	Gripping force [N]	Weight [kg]	IP class
MGH8000	10 - 20	60 - 90	0,35 - 0,5	IP54
MGH8100	10 - 20	180 - 220	0,7 - 0,85	IP54
MGH8200	30 - 40	500 - 570	2,4 - 2,9	IP54
MGH8300	50 - 100	800 - 910	5,1 - 7,3	IP54

▶ FURTHER INFORMATION IS AVAILABLE ONLINE

All information just a click away at: www.zimmer-group.com. Find data, illustrations, 3D models and operating instructions for your installation size using the order number for your desired product. Quick, clear and always up-to-date.

2-JAW PARALLEL GRIPPERS WITH LONG STROKE
INSTALLATION SIZE MGH8230

▶ PRODUCT SPECIFICATIONS

▶ Gripping force diagram

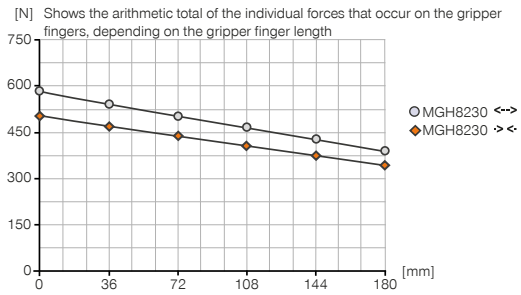

▶ Forces and moments

Displays static forces and moments that can also have an effect, besides the gripping force.

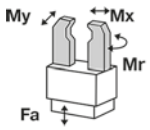

Mr [Nm]	64
Mx [Nm]	64
My [Nm]	45
Fa [N]	760

▶ INCLUDED IN DELIVERY

4 [piece]
Centering Disc
DST41000

▶ RECOMMENDED ACCESSORIES

ENERGY SUPPLY

GVM5
Straight Fittings - Quick Connect Style

SENSORS

ANS0022
Attachment Kit for Inductive Proximity Switch

NJ8-E2
Inductive proximity switch - Cable 5 m

NJ8-E2S
Inductive proximity switch – M8

MFS01-K-KHC-P1-PNP
Magnetic field sensor angled, cable 5 m

MFS01-S-KHC-P1-PNP
Magnetic field sensor angled, cable 0.3 m - M8 connector

SENSORS

MFS02-K-KHC-P1-PNP
Magnetic field sensor straight, cable 5 m

MFS02-S-KHC-P1-PNP
Magnetic field sensor straight, cable 0.3 m - M8 connector

MFS02-S-KHC-IL
Straight position sensor, cable 0.3 m – M8 plug

CONNECTIONS / OTHER

KAG500
Plug-in connector Straight Cable 5m - female connector M8

KAW500
Plug-in connector Angled Cable 5m - female connector M8

	► Technical data
Order no.	**MGH8230**
Stroke per jaw [mm]	30
Gripping force in closing [N]	500
Gripping force in opening [N]	570
Closing time [s]	0.14
Opening time [s]	0.1
Repetition accuracy +/- [mm]	0.05
Operating pressure min. [bar]	3
Operating pressure max. [bar]	8
Nominal operating pressure [bar]	6
Operating temperature min. [°C]	+5
Operating temperature max. [°C]	+80
Air volume per cycle [cm³]	64
Certifications	LABS / REACH / RoHS
Protection to IEC 60529	IP54
Weight [kg]	2.3

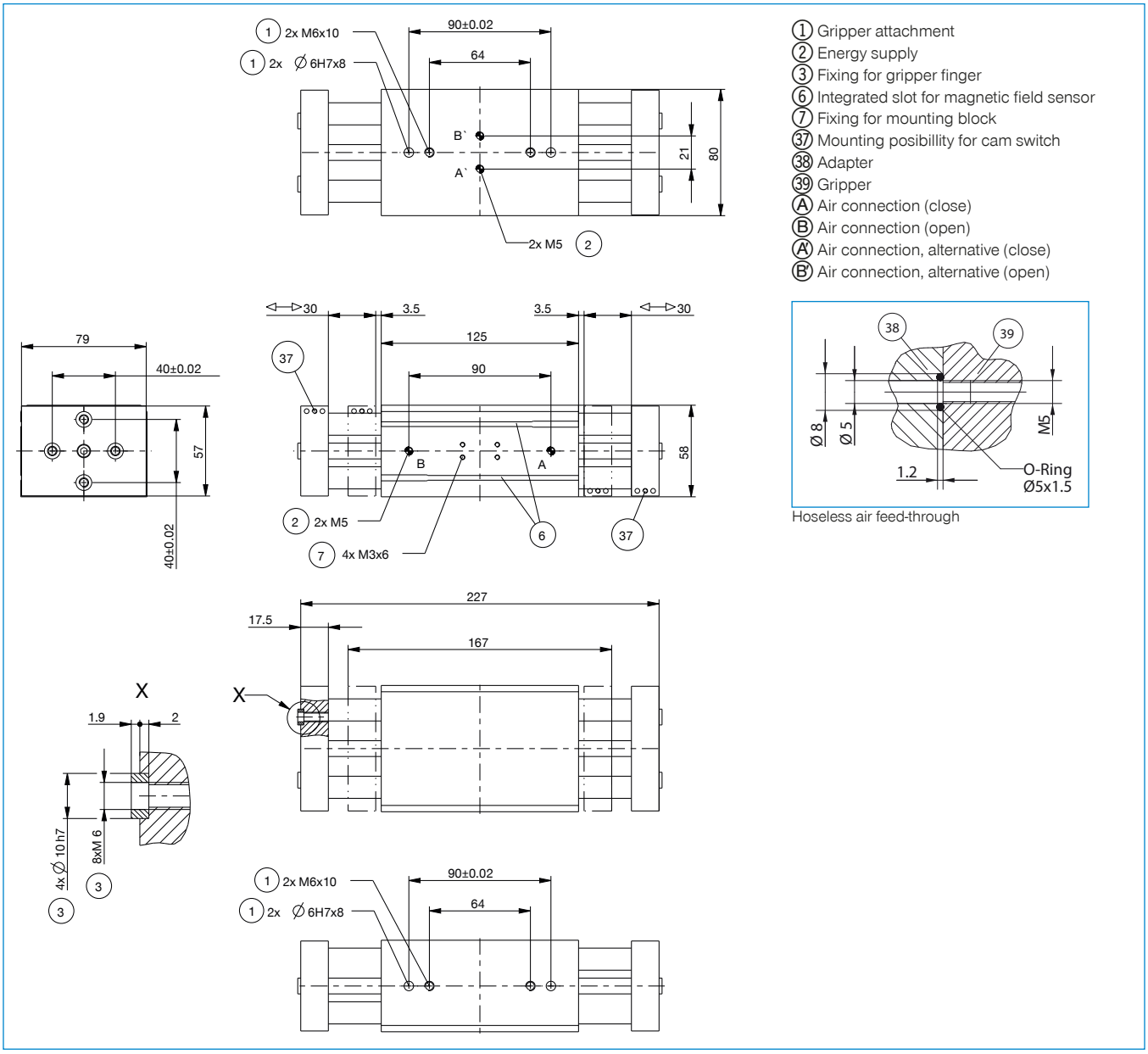

Hoseless air feed-through

2-JAW PARALLEL GRIPPERS WITH LONG STROKE
SERIES MGH8000 FUNCTIONAL DESCRIPTION

ENERGY SUPPLY

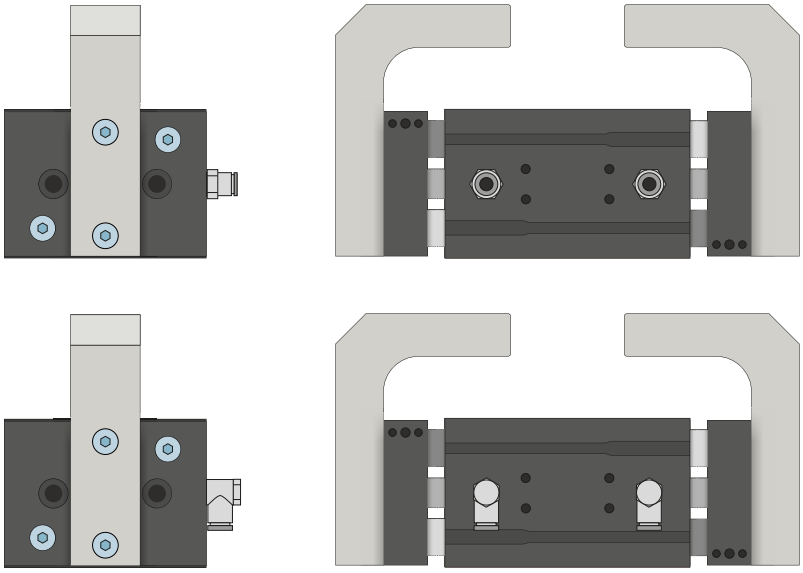

Pneumatic threaded connections

Available in straight and angled design. Can be chosen freely depending on the space conditions or installation situation.

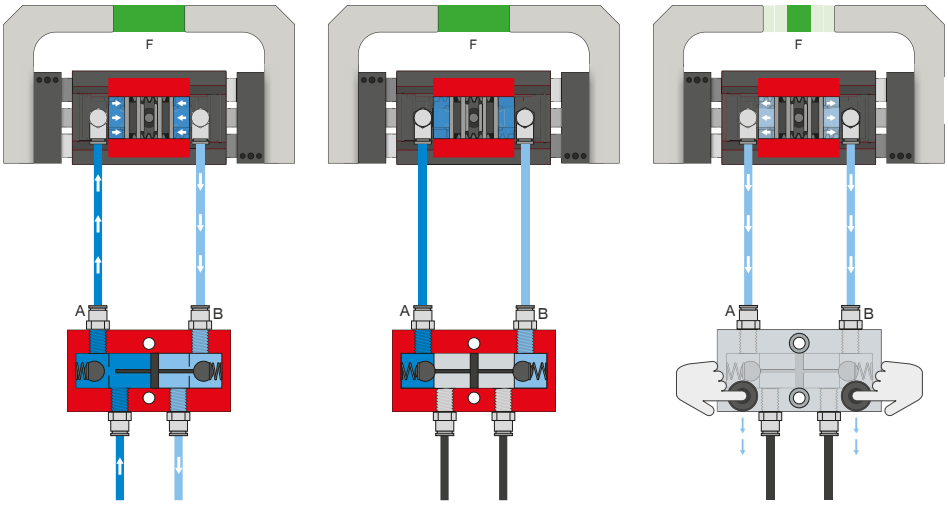

Pressure safety valve – DSV

Ensures safe retention of force and position if the system pressure drops

The integrated double check valve, which can be unlocked, retains the system pressure of the gripper in case of EMERGENCY STOP. To ensure the function, the valve must be installed as close to the gripper's air connection as possible. In variant E, two pushbuttons are installed that allow for controlled bleeding of the gripper.

SENSORS

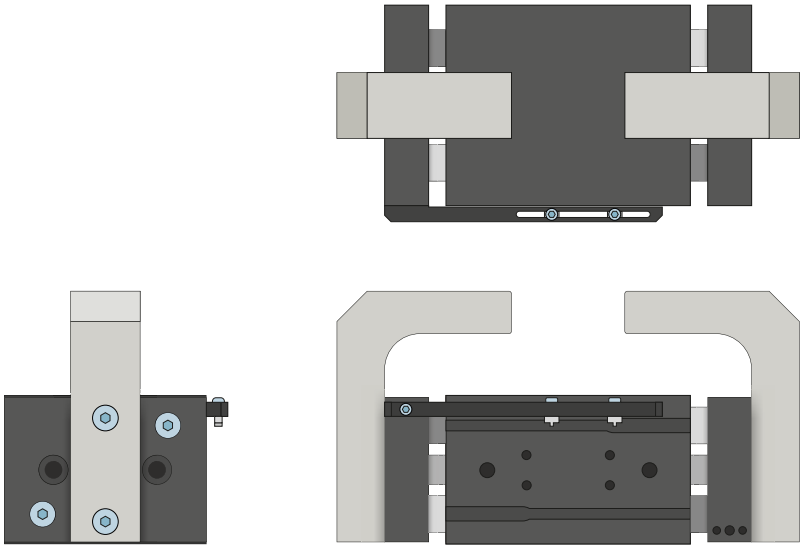

Attachment kit

The attachment kit is installed on the gripper using the fastening material included in the scope of delivery. The attachment kit enables sensing of the gripper positions via inductive proximity switches.

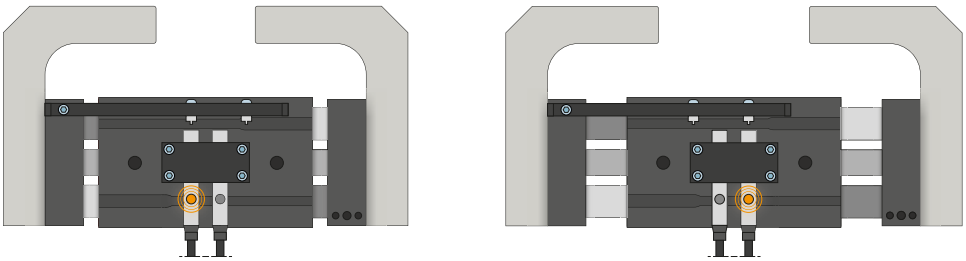

Inductive sensors – NJ

The sensor is guided into the mounting block and fixed in place according to its switching distance. Tuning to the desired position then takes place by adjusting the cam switch. The sensors are available in versions with 5 m cables with exposed leads and 0,3 m cable with male connector, as well as with direct male connector orientation.

SENSORS

MFS02

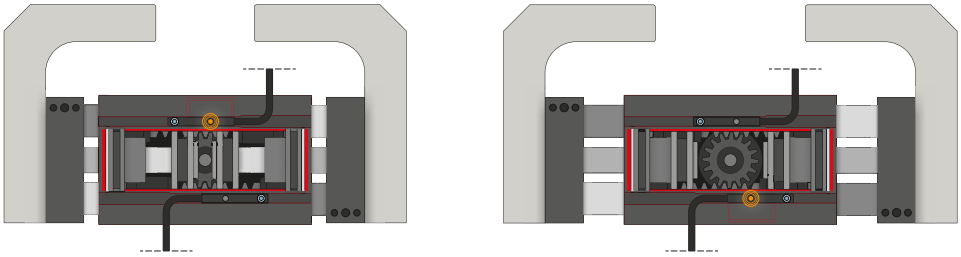

MFS01

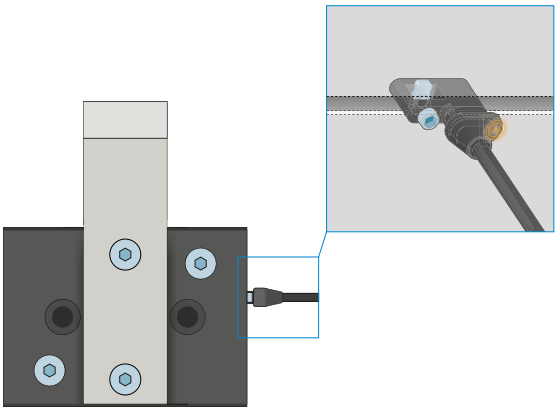

1-point magnetic field sensors – MFS

For non-contact sensing of the piston position

These sensors are installed in the C-groove of the gripper and detect the magnet attached to the piston of the gripper. To ensure use in a wide variety of space conditions, the sensors are available in two variants. While the horizontal MFS02, with straight cable outlet, disappears into the C-groove of the gripper almost completely, the vertical MFS01 is taller, but has a cable outlet that is offset at an angle of 90°. The variants are available in versions with 5 m cables with exposed leads and 0,3 m cable with connector.

CONNECTIONS / OTHER

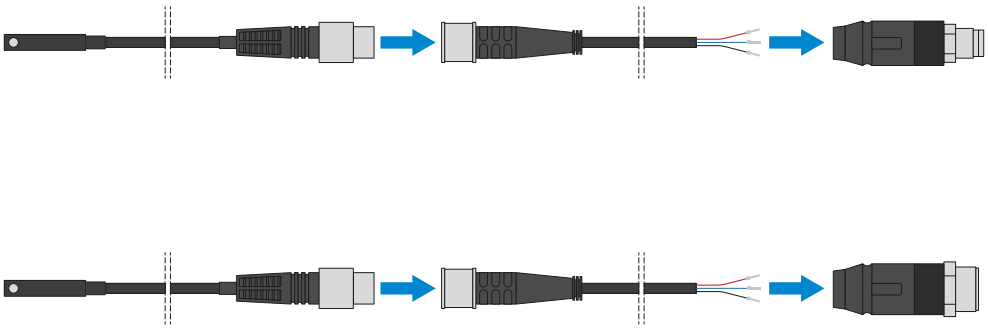

Plug-in connectors

For extending and fabricating the connection lines for the sensors

Cables with a length of 5 m with exposed leads are available. Depending on the specific needs, the cables can be shortened or fabricated with connectors in sizes M8 and M12.

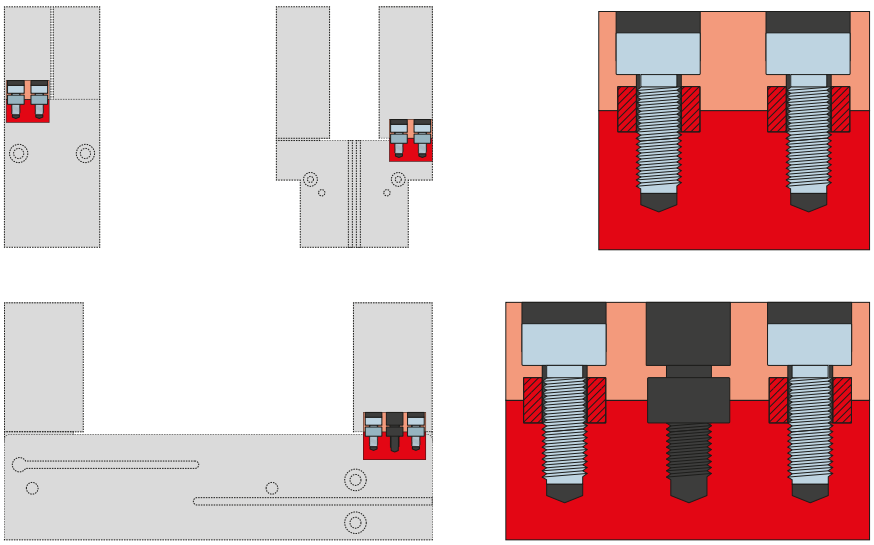

Centering sleeves

For defined position measurement of the gripper fingers

The centering sleeves are inserted into the fits of the gripper jaws to define the position of the gripper fingers. The centering sleeves are comparable to a pin connection.