2-JAW ANGULAR GRIPPERS
SERIES MGW800

▶ PRODUCT ADVANTAGES

“The economical”

- **Concentration on the essentials**

  The most economic type of gripping: This is how you reduce your production costs

- **High moment load**

  The optimally designed angular gear box provides the highest durability for your application

- **Failure-free continuous operation**

  Our uncompromising “Made in Germany” quality guarantees up to 10 million maintenance-free cycles

▶ SERIES CHARACTERISTICS

Installation size	Version	
MGW8XX	N	NC
Spring closing C		●
10 million maintenance-free cycles (max.)	●	●
Magnetic field sensor	●	●
IP30	●	●

▶ BENEFITS IN DETAIL

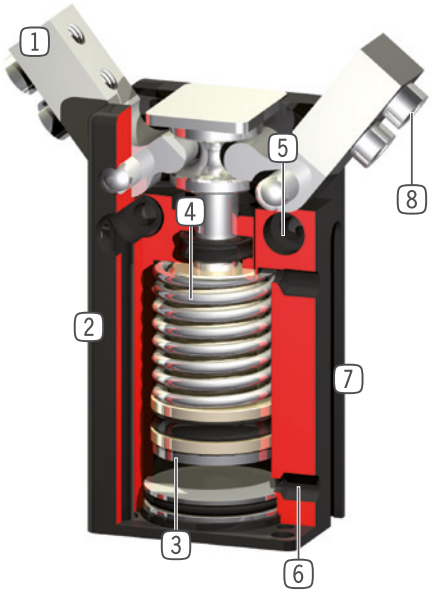

1 **Gripper jaw**
- individual gripper finger mounting

2 **Robust, lightweight housing**
- Hard-coated aluminum alloy

3 **Position sensing**
- permanent magnet for direct monitoring of piston movement

4 **Integrated gripping force safety device**
- spring integrated into cylinder as energy storage (from size 803 upwards)

5 **Mounting and positioning**
- mounting possible from several sides for versatile positioning

6 **Energy supply**
- possible from several sides

7 **Sensing slot**
- mounting and positioning of magnetic field sensors

8 **Removable centering sleeves**
- quick and economical positioning of the gripper fingers

▶ TECHNICAL DATA

Installation size	Stroke [°]	Gripping force [N]	Weight [kg]	IP class
MGW801	37.5	5 - 7,5	0,01	IP30
MGW802	37.5	9 - 10	0,015	IP30
MGW803	37.5	33 - 49	0,025 - 0,04	IP30
MGW804	37.5	51 - 72	0,05 - 0,08	IP30
MGW806	37.5	91 - 118	0,1 - 0,12	IP30
MGW808	37.5	148 - 190	0,18 - 0,19	IP30
MGW810	37.5	205 - 270	0,28 - 0,31	IP30
MGW812	37.5	255 - 325	0,4 - 0,45	IP30

▶ FURTHER INFORMATION IS AVAILABLE ONLINE

All information just a click away at: www.zimmer-group.com. Find data, illustrations, 3D models and operating instructions for your installation size using the order number for your desired product. Quick, clear and always up-to-date.

2-JAW ANGULAR GRIPPERS
INSTALLATION SIZE MGW802

▶ PRODUCT SPECIFICATIONS

▶ Gripping force diagram

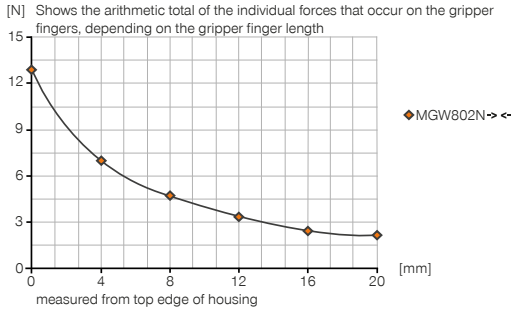

▶ Forces and moments

Displays static forces and moments that can also have an effect, besides the gripping force.

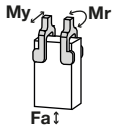

Mr [Nm]	0.3
My [Nm]	0.3
Fa [N]	60

▶ INCLUDED IN DELIVERY

4 [piece]
Centering Disc
DST80200

▶ RECOMMENDED ACCESSORIES

ENERGY SUPPLY

GVM3
Straight Fittings - Barb Style Connection

WVM3
Angled Fittings - Barb Style Connection

ENERGY SUPPLY

DEV04
Quick Exhaust Valve

	► Technical data
Order no.	**MGW802N**
Stroke per jaw [°]	37.5
Gripping moment in closing [Nm]	0.045
Gripping moment in opening [Nm]	0.05
Gripping moment secured by spring min. [Nm]	
Gripping force in closing [N]	9
Gripping force in opening [N]	10
Closing time [s]	0.01
Opening time [s]	0.01
Repetition accuracy +/- [mm]	0.05
Operating pressure min. [bar]	3
Operating pressure max. [bar]	8
Nominal operating pressure [bar]	6
Operating temperature min. [°C]	5
Operating temperature max. [°C]	+80
Air volume per cycle [cm³]	0.22
Certifications	LABS / REACH / RoHS
Protection to IEC 60529	IP30
Weight [kg]	0.016

N

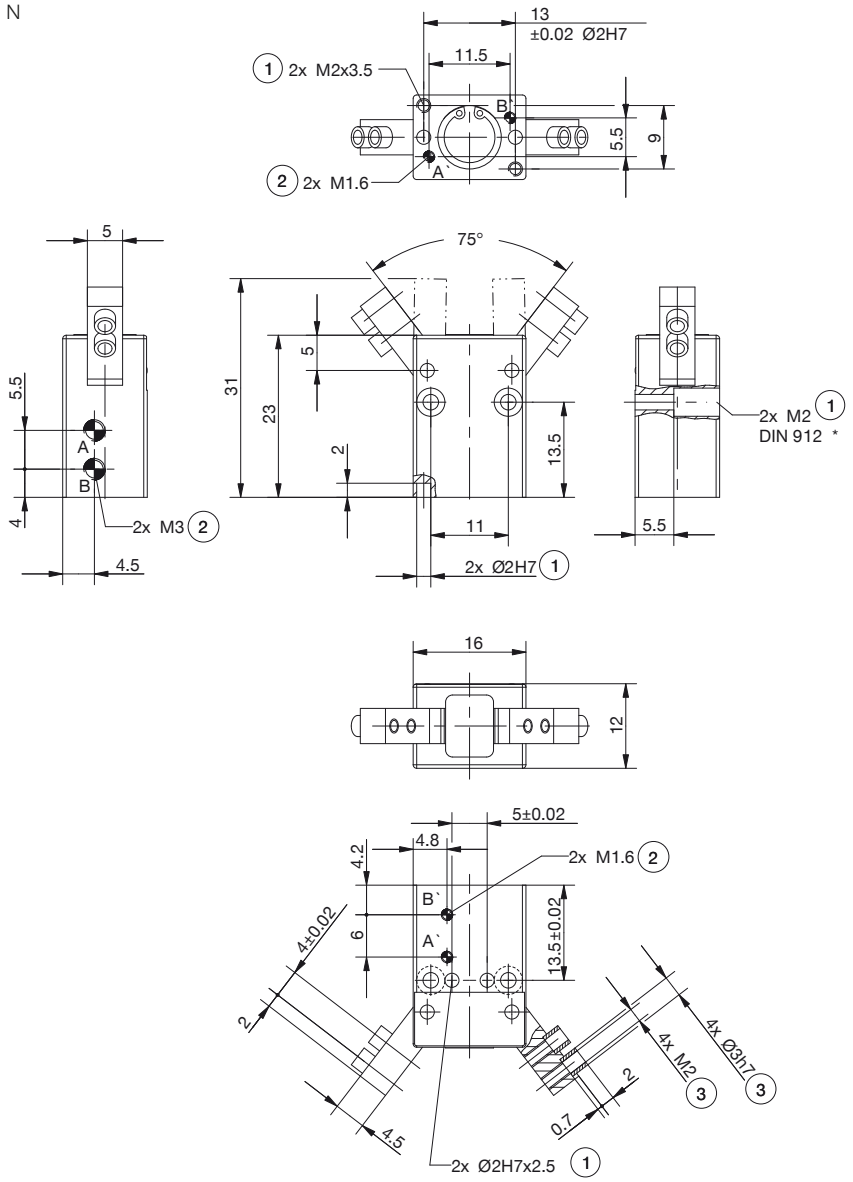

1 Gripper attachment
2 Energy supply
3 Fixing for gripper finger
38 Adapter
39 Gripper
A Air connection (close)
B Air connection (open)
A' Air connection, alternative (close)
B' Air connection, alternative (open)

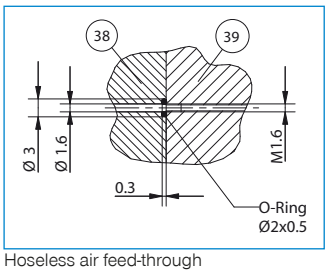

Hoseless air feed-through

2-JAW ANGULAR GRIPPERS
SERIES MGW800 FUNCTIONAL DESCRIPTION

ENERGY SUPPLY

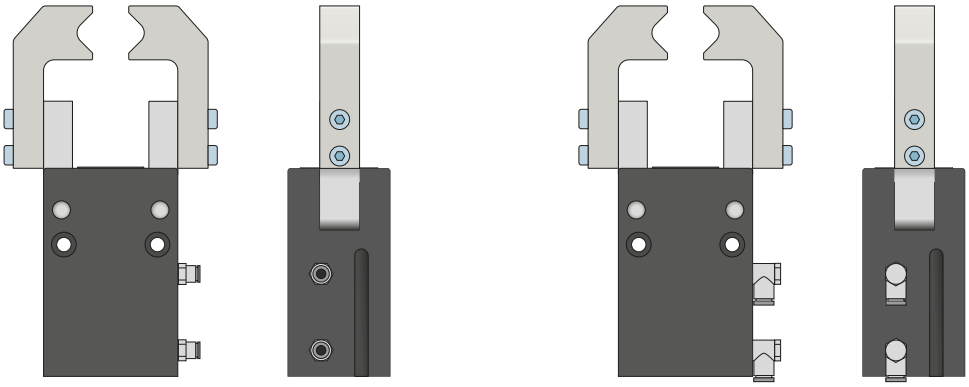

Pneumatic threaded connections

Available in straight and angled design. Can be chosen freely depending on the space conditions or installation situation.

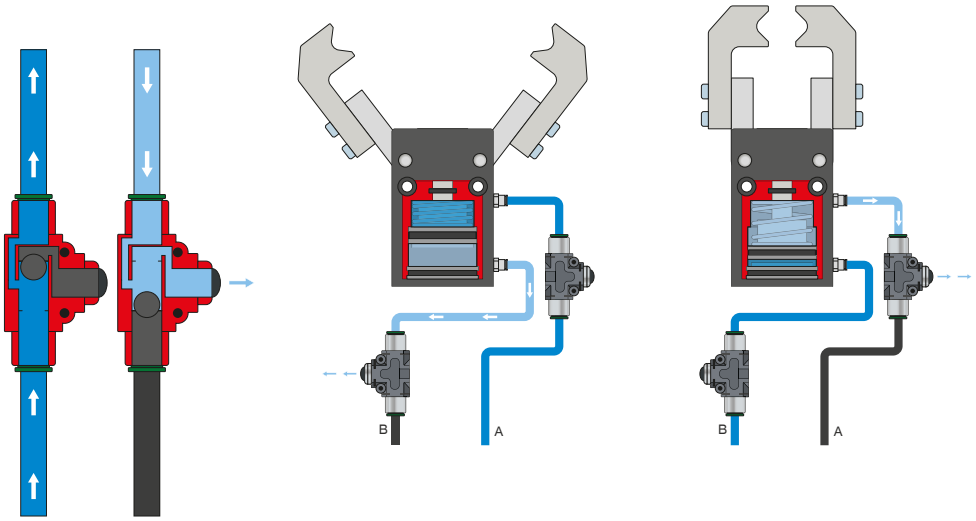

Quick exhaust valve – DEV

For rapid bleeding of the compressed air and preventing back pressure

The inline valves make a faster cycle time possible and prevent the formation of condensate in grippers with a small cylinder volume. To ensure the function, the valve must be installed as close to the gripper's air connection as possible.

ENERGY SUPPLY

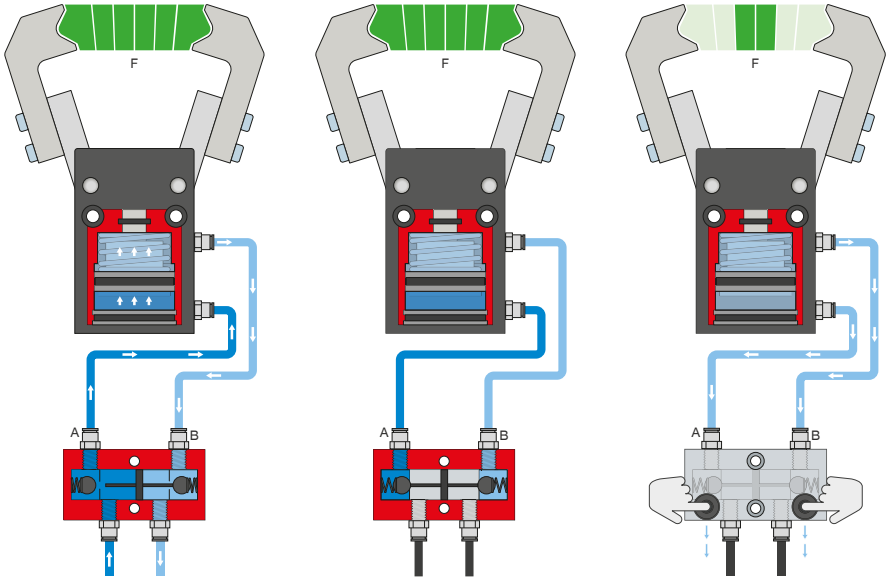

Pressure safety valve – DSV

Ensures safe retention of force and position if the system pressure drops

The integrated double check valve, which can be unlocked, retains the system pressure of the gripper in case of EMERGENCY STOP. To ensure the function, the valve must be installed as close to the gripper's air connection as possible. In variant E, two pushbuttons are installed that allow for controlled bleeding of the gripper.

2-JAW ANGULAR GRIPPERS
SERIES MGW800 FUNCTIONAL DESCRIPTION

SENSORS

MFS02

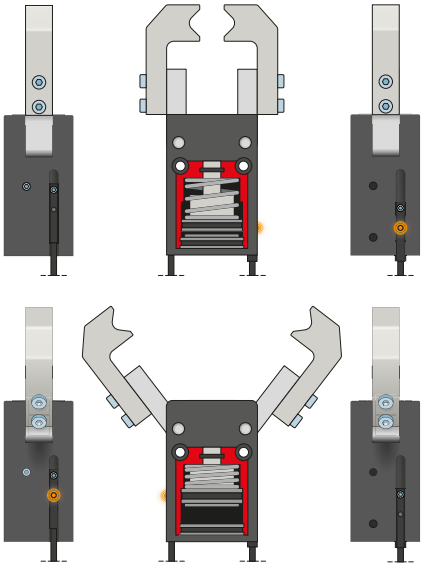

MFS01

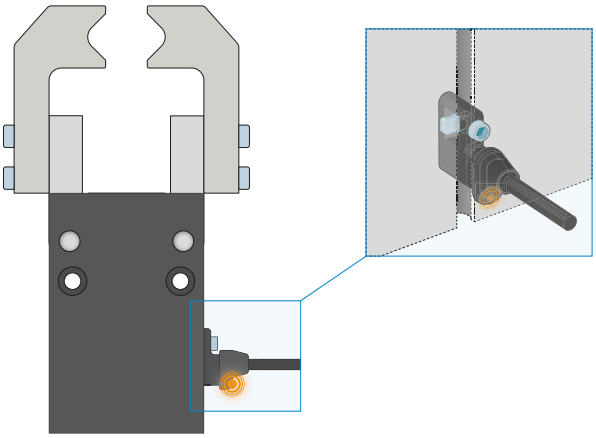

1-point magnetic field sensors – MFS

For non-contact sensing of the piston position

These sensors are installed in the C-groove of the gripper and detect the magnet attached to the piston of the gripper. To ensure use in a wide variety of space conditions, the sensors are available in two variants. While the horizontal MFS02, with straight cable outlet, disappears into the C-groove of the gripper almost completely, the vertical MFS01 is taller, but has a cable outlet that is offset at an angle of 90°. The variants are available in versions with 5 m cables with exposed leads and 0,3 m cable with connector.

CONNECTIONS / OTHER

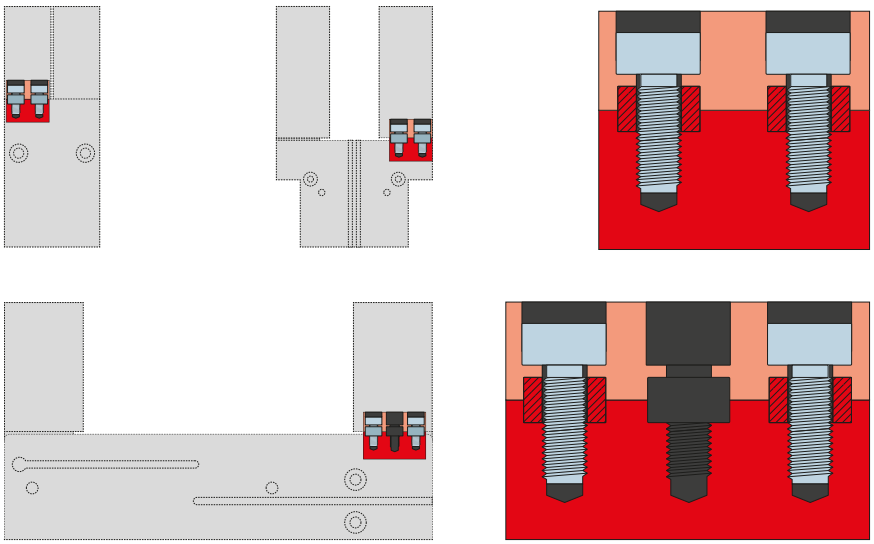

Centering sleeves

For defined position measurement of the gripper fingers

The centering sleeves are inserted into the fits of the gripper jaws to define the position of the gripper fingers. The centering sleeves are comparable to a pin connection.