FLAT SWIVEL UNITS
SERIES MSF

▶ PRODUCT ADVANTAGES

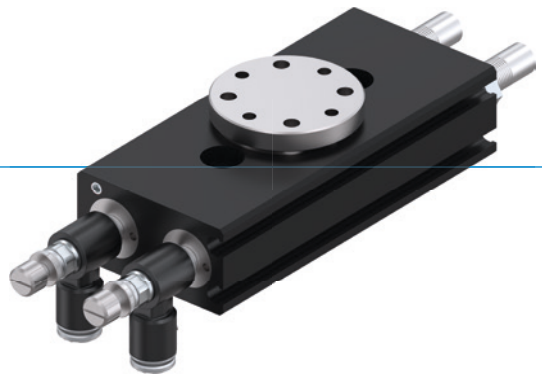

“The unique”

▶ **Decide for yourself!**

Flange connection or journal shaft, with or without shock absorbers: The multitude of variants ensure you always find what you need

▶ **Flat structure**

Thanks to the reverse double piston drive, the unit can work in operations requiring flat conditions. This is how you can build your application to save more space

▶ **Infinitely adjustable swivel angle**

Become flexible and unique with the completely adjustable swivel angle that also reduces set up times

▶ BENEFITS IN DETAIL

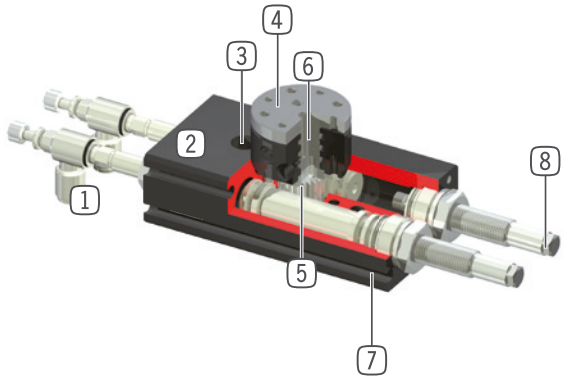

1 **Air flow control valve**
- for speed regulation
- included in scope of delivery

2 **Robust, lightweight housing**
- Hard-coated aluminum alloy

3 **Mounting and positioning**
- mounting possible from several sides for versatile positioning

4 **Tool intake**
- with shaft extension or flange available

5 **Force transfer**
- rack and pinion

6 **Up to 2 way integrated air feed-through**
- for hoseless air transfer
- hose package does not have to be pivoted

7 **Sensing slot**
- mounting and positioning of magnetic field sensors

8 **Integrated shock absorbers with spiral groove technology**
- adjustable end position damping

▶ SERIES CHARACTERISTICS

Installation size	Version					
MSFXX	N-F001	S-F001	N-F002	S-F002	N-D2	S-D2
10 million maintenance-free cycles (max.)	●	●	●	●	●	●
IP41	●	●	●	●	●	●
Magnetic field sensor	●	●	●	●	●	●
Flange	●	●			●	●
Shaft extension			●	●		
Fluid feed-through					●	●
Elastomer end position damping	●		●		●	
Powerstop end position damping		●		●		●
Positionability - 2 positions	●	●	●	●	●	●
Adjustable swivel angle	●	●	●	●	●	●

▶ TECHNICAL DATA

Installation size	Swivel angle [°]	Torque [Nm]	Weight [kg]	IP class
MSF34	90 / 180	0,3 - 0,4	0,17 - 0,21	IP41
MSF40	90 / 180	0,6 - 0,7	0,26 - 0,29	IP41
MSF44	90 / 180	1 - 1,2	0,41 - 0,46	IP41

▶ FURTHER INFORMATION IS AVAILABLE ONLINE

All information just a click away at: www.zimmer-group.com. Find data, illustrations, 3D models and operating instructions for your installation size using the order number for your desired product. Quick, clear and always up-to-date.

FLAT SWIVEL UNITS
INSTALLATION SIZE MSF34

▶ PRODUCT SPECIFICATIONS

▶ Moment of inertia

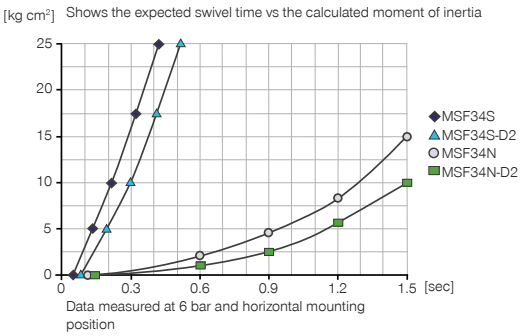

▶ INCLUDED IN DELIVERY

2 [piece]
Flow Control Valves - with Swivel joint
DRVM3X4

2 [piece]
Centering Disc
DST40800

▶ RECOMMENDED ACCESSORIES

ENERGY SUPPLY

GVM3
Straight Fittings - Barb Style Connection

DSV1-8
Pressure safety valve

DSV1-8E
Pressure safety valve with quick exhaust

SENSORS

MFS01-S-KHC-P1-PNP
Magnetic field sensor angled, cable 0.3 m - M8 connector

MFS02-S-KHC-P1-PNP
Magnetic field sensor straight, cable 0.3 m - M8 connector

MFS01-S-KHC-P2-PNP
2-point sensor angled, cable 0.3 m - M8 connector

SENSORS

MFS02-S-KHC-P2-PNP
2-point sensor straight, cable 0.3 m - M8 connector

CONNECTIONS / OTHER

KAG500
Plug-in connector Straight Cable 5m - female connector M8

KAW500
Plug-in connector Angled Cable 5m - female connector M8

S8-G-3
Plug-in connector customizable Straight - male connector M8

S12-G-3
Plug-in connector customizable Straight - male connector M12

	► Technical data					
Order no.	**MSF34N-F001**	**MSF34S-F001**	**MSF34N-F002**	**MSF34S-F002**	**MSF34N-D2**	**MSF34S-D2**
Swivel angle [°]	90 / 180	90 / 180	90 / 180	90 / 180	90 / 180	90 / 180
Torque [Nm]	0.4	0.4	0.4	0.4	0.3	0.3
End position damping by	Elastomer	PowerStop	Elastomer	PowerStop	Elastomer	PowerStop
Tool holder via	Flange	Flange	Shaft extension	Shaft extension	Flange	Flange
Repetition accuracy +/- [°]	0.07	0.01	0.07	0.01	0.07	0.01
Pneumatic energy transfer [Quantity]					2	2
Axial bearing load [N]	215	215	215	215	215	215
Radial bearing load [Nm]	5.5	5.5	5.5	5.5	5.5	5.5
Operating pressure min. [bar]	3	3	3	3	3	3
Operating pressure max. [bar]	8	8	8	8	8	8
Nominal operating pressure [bar]	6	6	6	6	6	6
Operating temperature min. [°C]	5	5	5	5	5	5
Operating temperature max. [°C]	+80	+80	+80	+80	+80	+80
Air volume per cycle 90° [cm³]	3	3	3	3	3	3
Air volume per cycle 180° [cm³]	6	6	6	6	6	6
Certifications	LABS / REACH / RoHS	LABS / REACH / RoHS	LABS / REACH / RoHS	LABS / REACH / RoHS	LABS / REACH / RoHS	LABS / REACH / RoHS
Protection to IEC 60529	IP41	IP41	IP41	IP41	IP41	IP41
Weight [kg]	0.19	0.2	0.18	0.19	0.22	0.23

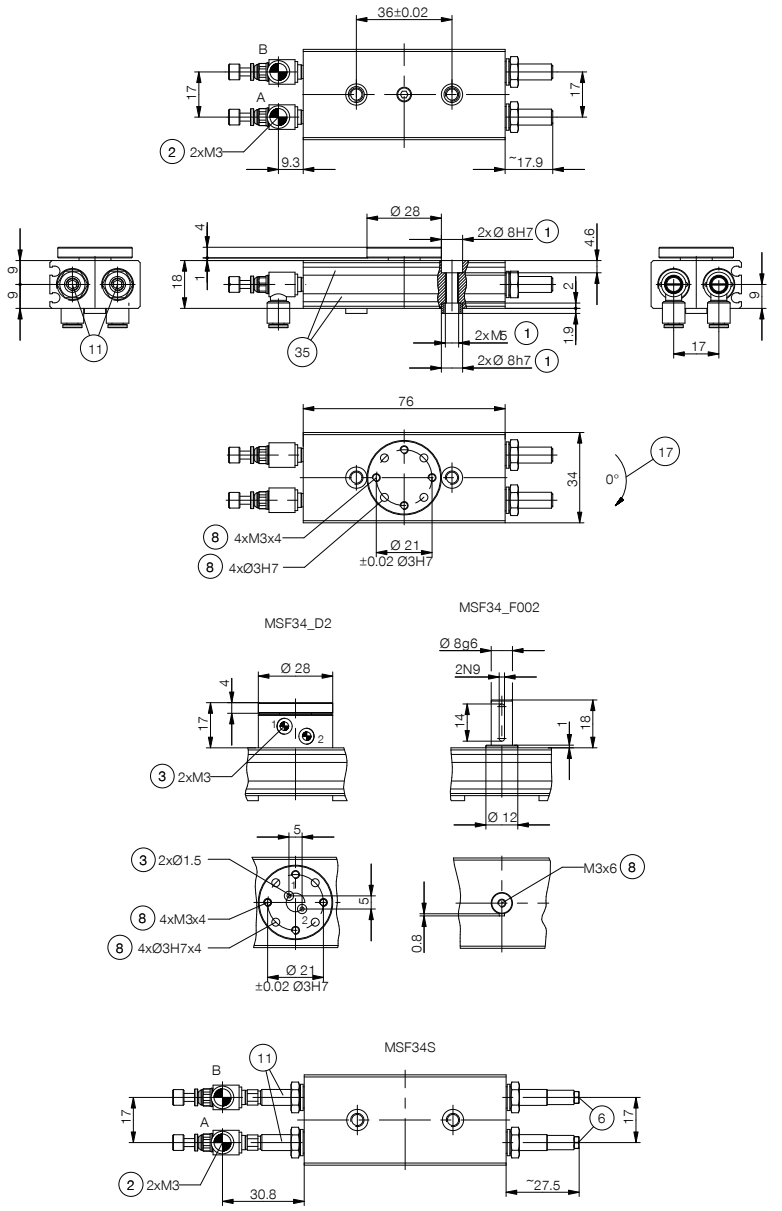

1 Fixings for swivel unit
2 Energy supply
3 Integrated air feed-through
6 Shock absorber
8 Fixing tool side
11 Internal positive stop
17 Direction of rotation
35 Integrated slot for magnetic field sensor
A Air connection 90°-180°
B Air connection 0°