ROTARY CYLINDERS
SERIES PRN

▶ PRODUCT ADVANTAGES

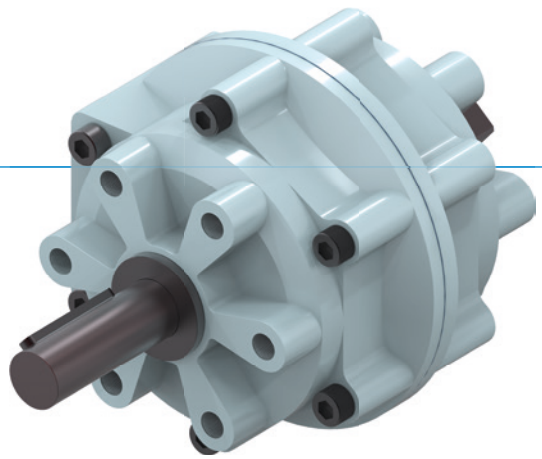

“The economical”

- **Concentration on the essentials**

  The most economic type of swivelling reduces your production costs

- **Dampened end position**

  Using the hydraulic brake allows you to move up to the end positions gently, increasing the process reliability and durability of your application

- **Forged drive shaft**

  This shaft is not only robust, but can be individually adjusted

▶ SERIES CHARACTERISTICS

Installation size	Version				
PRNXXX	-90	-100	-180	-270	-280
1.5 million maintenance-free cycles (max.)	●	●	●	●	●
IP54	●	●	●	●	●
Inductive sensor	●	●	●	●	●
Positionability - 2 positions	●	●	●	●	●
Rotation angle 90°	●				
Rotation angle 180°			●		
Rotation angle 270°				●	

▶ STARTING ANGLE

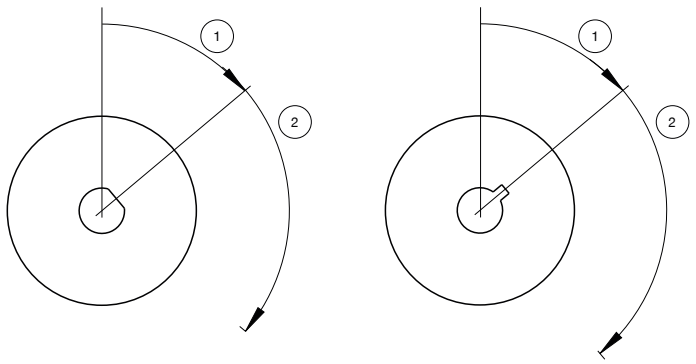

① Starting angle
② Swivel angle

Installation size	
PRN1	PRN20
PRN3	PRN30
PRN10	PRN50
	PRN150
	PRN300
	PRN800

▶ TECHNICAL DATA

Installation size	Swivel angle [°]	Torque [Nm]	Weight [kg]	IP class
PRN1	90 - 270	0,15	0,04	IP54
PRN3	90 - 270	0,38	0,07	IP54
PRN10	90 - 270	1,2	0,14	IP54
PRN20	90 - 270	2,1	0,25	IP54
PRN30	90 - 270	4,1	0,5	IP54
PRN50	90 - 270	5,9 - 12,8	0,75 - 0,8	IP54
PRN150	90 - 270	18 - 41,5	1,6 - 1,9	IP54
PRN300	90 - 270	34,5 - 83	3,6 - 4,1	IP54
PRN800	90 - 270	123 - 247	12 - 13	IP54

▶ FURTHER INFORMATION IS AVAILABLE ONLINE

All information just a click away at: www.zimmer-group.com. Find data, illustrations, 3D models and operating instructions for your installation size using the order number for your desired product. Quick, clear and always up-to-date.

ROTARY CYLINDERS
INSTALLATION SIZE PRN800

▶ PRODUCT SPECIFICATIONS

▶ Moment of inertia

[kg m²] Shows the expected swivel time vs the calculated moment of inertia

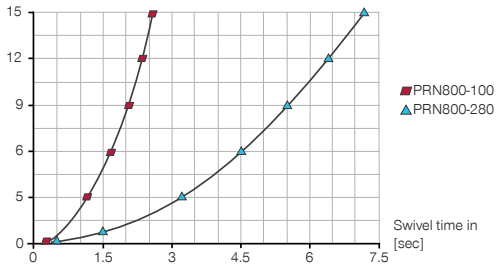

Data measured at 6 bar and horizontal mounting position

▶ Forces and moments

Shows the maximum static shaft load.

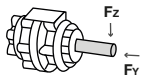

FY [N]	490
FZ [N]	4900

▶ RECOMMENDED ACCESSORIES

ENERGY SUPPLY

GV1-2X13ID
Straight Fittings - Barb Style Connection

DRV1-4I
Flow Control Valves - in Line

ENERGY SUPPLY

DSV1-8
Pressure safety valve

DSV1-8E
Pressure safety valve with quick exhaust

	► Technical data	
Order no.	**PRN800-90**	**PRN800-270**
Swivel angle [°]	90	270
Tolerance swivel angle [°]	0° / +3°	0° / +3°
Starting Angle [°]	45	45
Torque [Nm]	247	123
Swivel time [s]	0.45	1
Operating pressure min. [bar]	2	2
Operating pressure max. [bar]	10	10
Nominal operating pressure [bar]	6	6
Operating temperature min. [°C]	5	5
Operating temperature max. [°C]	+60	+60
Air volume per cycle [cm³]	1548	2092
Certifications	LABS / REACH / RoHS	LABS / REACH / RoHS
Protection to IEC 60529	IP54	IP54
Weight [kg]	13	12

① Energy supply
② Fixing Rotor
Ⓐ Air connection (0°-90°/180°/270°)
Ⓑ Air connection (90°/180°/270°-0°)

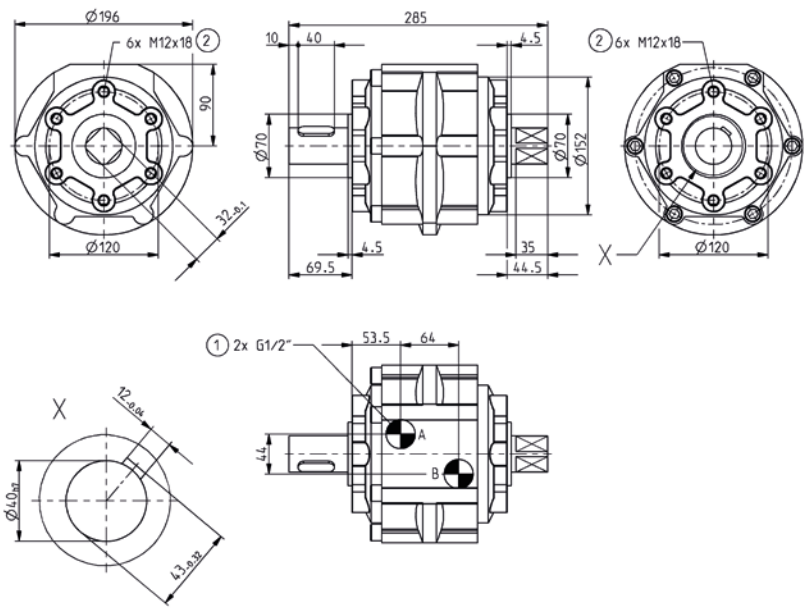

ROTARY CYLINDERS
ACCESSORIES SERIES PRN

► OIL DAMPER FOR PNEUMATIC ROTOR

► **Technical data**

Order no.	CRN50	CRN150	CRN300
suitable for	PRN50	PRN150	PRN300
Brake angle [°]	11	12	14
Energy absorption per stroke max. [Nm]	3	10	20
Energy absorption per stroke max. [Nm/h]	12000	43200	84000
Operating temperature min. [°C]	5	5	5
Operating temperature max. [°C]	50	50	50
Weight [g]	240	420	780

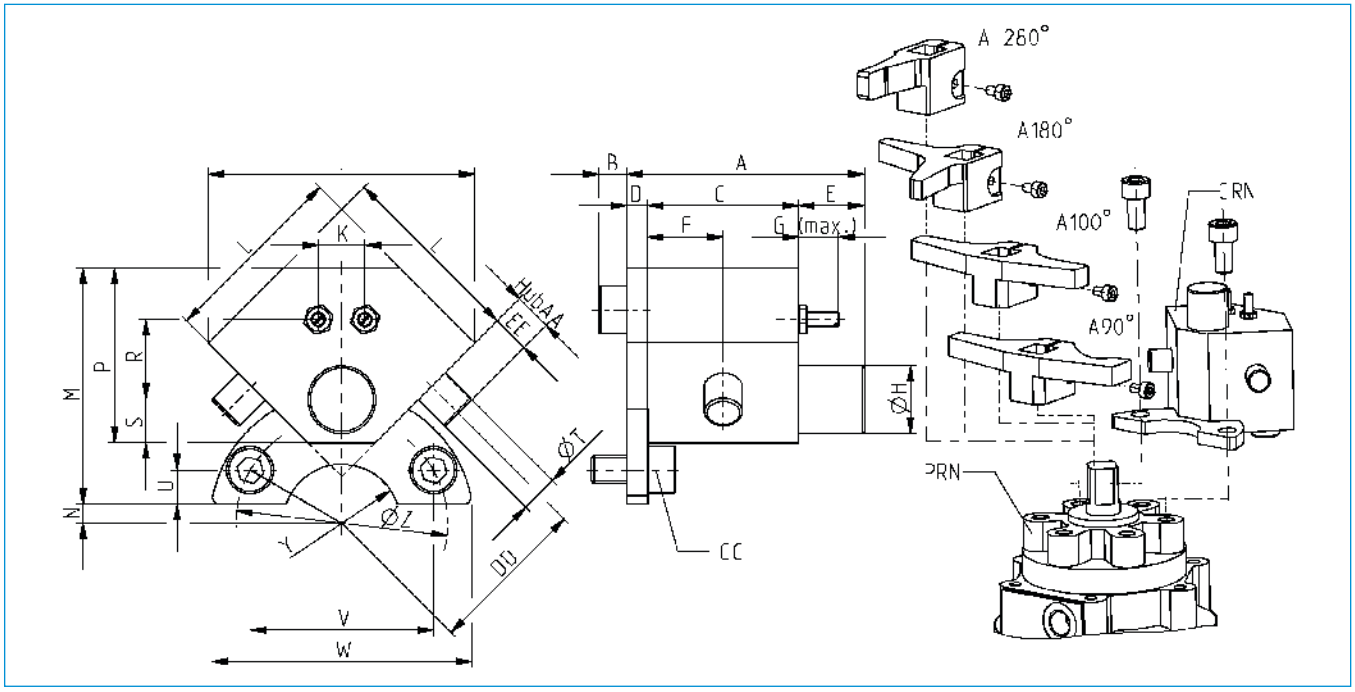

Order no.	A [mm]	B [mm]	C [mm]	D [mm]	E [mm]	F [mm]	G [mm]	H [mm]	J [mm]	K [mm]	L [mm]	M [mm]	N [mm]	P [mm]	R [mm]	S [mm]	T [mm]	U [mm]	V [mm]	W [mm]	Y [mm]	Z [mm]	AA [mm]	CC	DD [mm]	EE [mm]
CRN50	50.6	6.0	3.2	4.5	14	16	8.5	Ø14,4	56.6	9.9	40	50	4.0	37	17.0	9.2	Ø8	7.2	39.0	56	R12,5	Ø45	6.5	M6x1x12	34	8
CRN150	56.5	7.2	36	4.5	16	18	8.5	Ø18,4	70.7	11.3	50	62	9.5	49	25.5	11.4	Ø10	8.0	60.6	80	R15,0	Ø70	10.0	M8x1,25x16	46	12
CRN300	62.5	7.2	42	4.5	16	21	12.0	Ø22,5	91.9	12.7	65	87	8.0	61	33.2	14.1	Ø12	12.0	69.2	95	R22,5	Ø80	15.0	M10x1,5x20	62	18

▶ STOP LEVER FOR OIL DAMPER

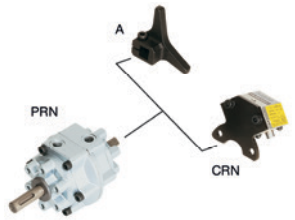

▶ STOP LEVER PRN50

	▶ Technical data		
Order no.	**A50-90-B**	**A50-180-B**	**A50-270**
Swivel angle [°]	90	180	270

▶ STOP LEVER PRN150

	▶ Technical data		
Order no.	**A150-90-B**	**A150-180-B**	**A150-270**
Swivel angle [°]	90	180	270

▶ STOP LEVER PRN300

	▶ Technical data		
Order no.	**A300-90-B**	**A300-180-B**	**A300-270**
Swivel angle [°]	90	180	270