FLAT SWIVEL UNITS
SERIES SF-C

▶ PRODUCT ADVANTAGES

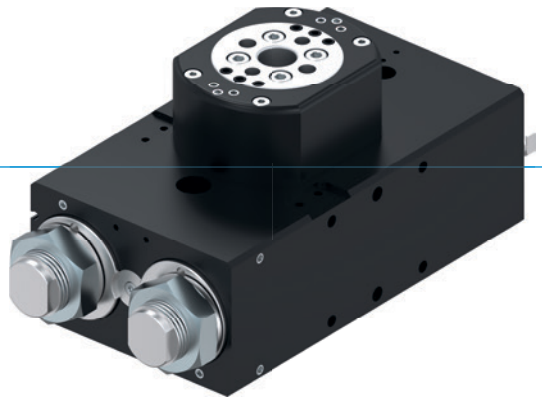

“The superior”

- **Up to 100% more performance than the benchmark**

  Superior end position damping lets you swivel more mass in the shortest amount of time, increasing your machine’s component output

- **Large centre bore**

  Reduce the interference contours in your application by placing your power supply line directly through the middle of the rotary flange

- **More than 100% higher radial bearing load than the benchmark**

  The generously scaled bearings stand for robustness and long service life and provide the highest process reliability for your application

▶ BENEFITS IN DETAIL

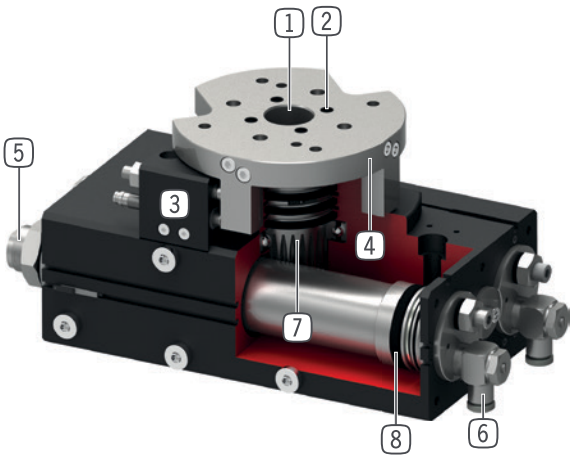

1 **Two way ball bearing hollow shaft**
- for feedthrough cables and hoses
- high forces and moments capacity

2 **Up to 8 way integrated air feed-through**
- for hoseless air transfer
- hose package does not have to be pivoted

3 **Adjustable end position**
- +/- 3° adjustable end position

4 **Large, precise locating flange**
- simple tool connection

5 **Integrated shock absorbers with spiral groove technology**
- adjustable end position damping
- heating is prevented through installation in pneumatic pressure chamber

6 **Air flow control valve**
- for speed regulation (included in the delivery)

7 **Force transfer**
- rack and pinion

8 **Drive**
- two double-acting pneumatic cylinders
- high torque rating

▶ SERIES CHARACTERISTICS

Installation size	Version									
SFXXX	-90N	-180N	N	-90DX	-180DX	DX	ML	MLDX	M	MDX
10 million maintenance-free cycles (max.)	●	●	●	●	●	●	●	●	●	●
IP64	●	●	●	●	●	●	●	●	●	●
Inductive sensor	●	●	●	●	●	●	●	●	●	●
Magnetic field sensor	●	●	●	●	●	●	●	●	●	●
Flange	●	●	●	●	●	●	●	●	●	●
Powerstop end position damping	●	●	●	●	●	●	●	●	●	●
End positions adjustable +/- 3	●	●	●	●	●	●	●	●	●	●
Positionability - 2 positions	●	●	●	●	●	●				
Positionability - 3 positions							●	●		
Positionability - 3 positions locked									●	●
Rotation angle 90°	●			●			●	●	●	●
Rotation angle 180°		●			●		●	●	●	●
Swivel angle 180° freely adjustable			●			●				
Fluid feed-through				●	●	●		●		●

▶ TECHNICAL DATA

Installation size	Swivel angle [°]	Torque [Nm]	Weight [kg]	IP class
SF50	0 - 180	1,5 - 2,4	0,6 - 1,14	IP64
SF74	0 - 180	4,5 - 7,3	1,6 - 2,6	IP64
SF100	0 - 180	13 - 20	3,7 - 5,8	IP64
SF125	0 - 180	32 - 38	8,8 - 12,9	IP64
SF155	0 - 180	54 - 62	15 - 21,8	IP64
SF195	0 - 180	120 - 130	27,5 - 41,1	IP64

▶ FURTHER INFORMATION IS AVAILABLE ONLINE

All information just a click away at: www.zimmer-group.com. Find data, illustrations, 3D models and operating instructions for your installation size using the order number for your desired product. Quick, clear and always up-to-date.

FLAT SWIVEL UNITS
SERIES SF-C

▶ HOW TO ORDER CORRECTLY

Order no.	SF	☐	☐	-C
Flat swivel units				
Installation size		50		
Installation size		74		
Installation size		100		
Installation size		125		
Installation size		155		
Installation size		195		
Swivel angle 0° - 180°, infinitely variable			N	
Integrated hoseless pneumatic feed-through, 4-way			D4	
Integrated hoseless pneumatic feed-through, 6-way			D6	
Integrated hoseless pneumatic feed-through, 8-way			D8	
Rotation angle 90°			-90N	
Integrated hoseless pneumatic feed-through, 4-way			-90D4	
Integrated hoseless pneumatic feed-through, 6-way			-90D6	
Integrated hoseless pneumatic feed-through, 8-way			-90D8	
Rotation angle 180°			-180N	
Integrated hoseless pneumatic feed-through, 4-way			-180D4	
Integrated hoseless pneumatic feed-through, 6-way			-180D6	
Integrated hoseless pneumatic feed-through, 8-way			-180D8	
Version: ML (Size SF50 / SF74 / SF100)				
▶ At -90° and +90° position, mechanical and shock-absorbed fixed stop ▶ 0° position is not locked, as opposed to the M version ▶ For these units, the driven pistons move against dominant limit stop pistons and, like for the locked center position, undergo shock absorption while moving into end position ▶ Simplified activation for horizontal rotary movements				
Swivel angle -90° - 0° - +90°			ML	
Integrated hoseless pneumatic feed-through, 4-way			MLD4	
Integrated hoseless pneumatic feed-through, 6-way			MLD6	
Integrated hoseless pneumatic feed-through, 8-way			MLD8	
Version: M (Size SF125 / SF155 / SF195)				
▶ All three positions for mechanical and shock-mounted fixed stop ▶ 0° center position using two stopper pistons with integrated shock absorbers ▶ A mechanical fixed stop is generated using ratchet bolts that are pushed through arrester pistons into the ring groove of the stopper piston				
Swivel angle -90° - 0° - +90°			M	
Integrated hoseless pneumatic feed-through, 4-way			MD4	
Integrated hoseless pneumatic feed-through, 6-way			MD6	
Integrated hoseless pneumatic feed-through, 8-way			MD8	

▶ VERSION: ML (SIZE SF50 / SF74 / SF100)

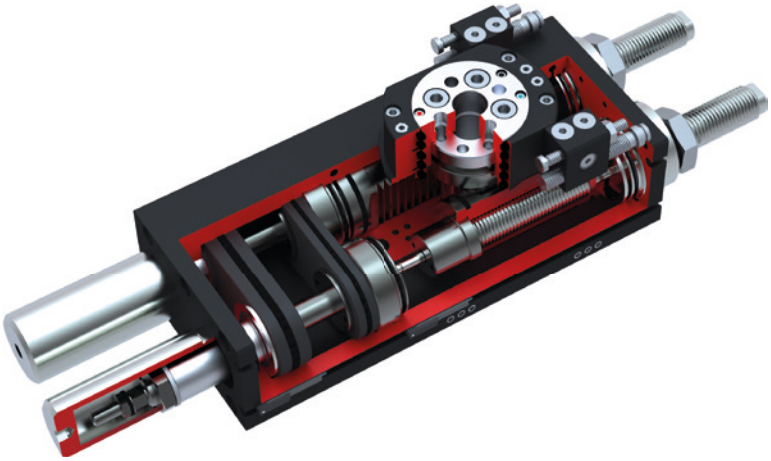

▶ VERSION: M (SIZE SF125 / SF155 / SF195)

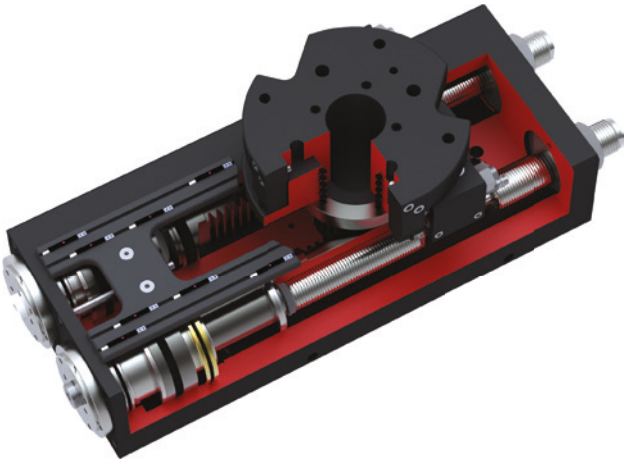

FLAT SWIVEL UNITS
INSTALLATION SIZE SF195MD8-C

▶ PRODUCT SPECIFICATIONS

▶ Moment of inertia

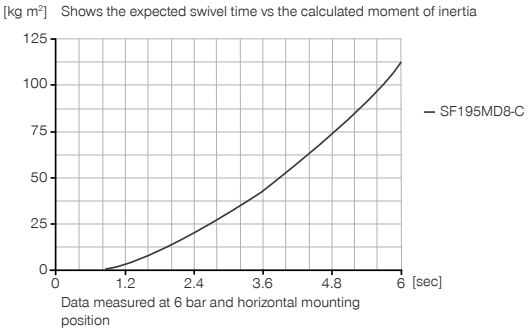

▶ INCLUDED IN DELIVERY

2 [piece]
Flow Control Valves - with Swivel joint
DRV1-4X8

8 [piece]
O-Ring
COR0050100

1 [piece]
Attachment Kit
ANS0082

1 [piece]
Commissioning USB
052650

▶ RECOMMENDED ACCESSORIES

ENERGY SUPPLY

DSV1-8
Pressure safety valve

DSV1-8E
Pressure safety valve with quick exhaust

SENSORS

MFS02-K-KHC-P1-PNP
Magnetic field sensor straight, cable 5 m

SENSORS

MFS02-S-KHC-P1-PNP
Magnetic field sensor straight, cable 0.3 m - M8 connector

CONNECTIONS / OTHER

KAG500
Plug-in connector Straight Cable 5m - female connector M8

S8-G-3
Plug-in connector customizable Straight - male connector M8

▶ RECOMMENDED ACCESSORY ATTACHMENT KIT

NJ8-E2
Inductive proximity switch - Cable 5 m

KAW500
Plug-in connector Angled Cable 5m - female connector M8

	► Technical data
Order no.	**SF195MD8-C**
Swivel angle [°]	-90 / 0 / +90
Torque [Nm]	120
Swivel angle regulable +/- [°]	3
Passage bore Ø [mm]	40
Axial bearing load [N]	7000
Radial bearing load [Nm]	1253
Repetition accuracy +/- [°]	0.01
Operating pressure min. [bar]	3
Operating pressure max. [bar]	8
Nominal operating pressure [bar]	6
Operating temperature min. [°C]	5
Operating temperature max. [°C]	+80
Air volume per cycle [cm³]	2035
Certifications	LABS / REACH / RoHS
Protection to IEC 60529	IP64
Weight [kg]	42

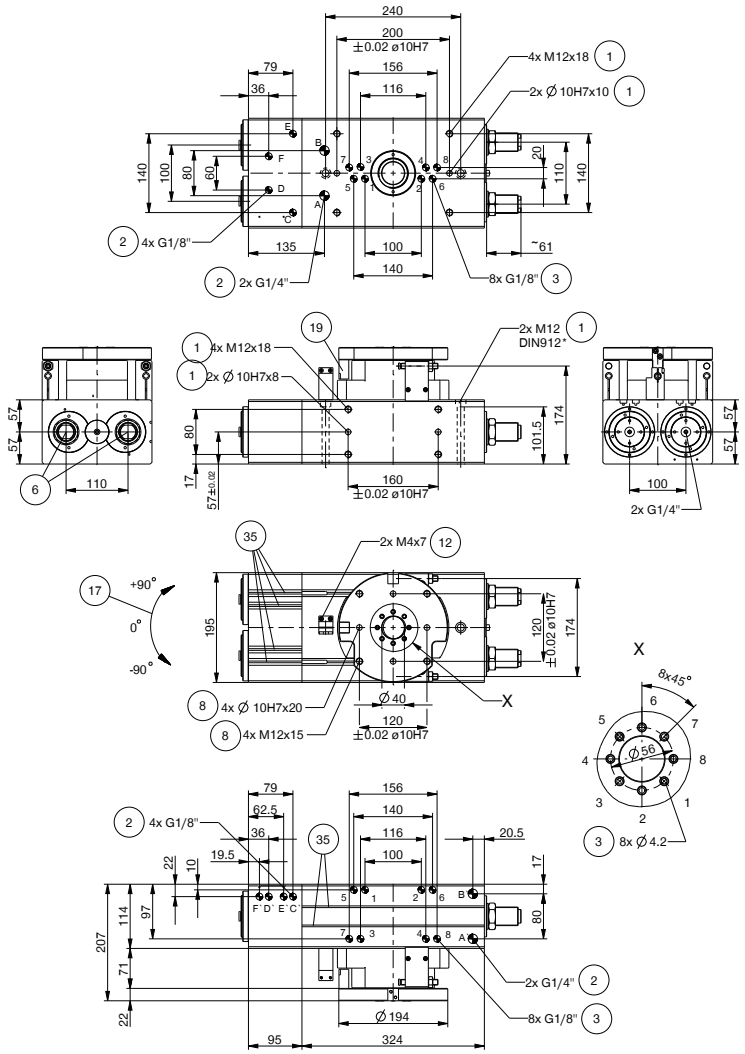

① Fixings for swivel unit
② Energy supply
③ Integrated air feed-through
⑤ Adjusting screw
⑥ Shock absorber
⑧ Fixing tool side
⑫ Fixing ANS
⑰ Direction of rotation
⑲ Switch cam
㉟ Integrated slot for magnetic field sensor
㊳ Adapter
㊴ Swivel unit
Ⓐ Air connection swivel to +90°
Ⓑ Air connection swivel to -90°
Ⓐ' Alternate air connection swivel to +90°
Ⓑ' Alternate air connection swivel to -90°
ⒸⒹⒺⒻ Air connection swivel to mid position
Ⓒ'Ⓓ'Ⓔ'Ⓕ' Alternate air connection swivel to mid position

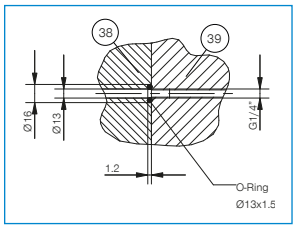

Hoseless energy supply (machine)

FLAT SWIVEL UNITS
SERIES SF-C FUNCTIONAL DESCRIPTION

ENERGY SUPPLY

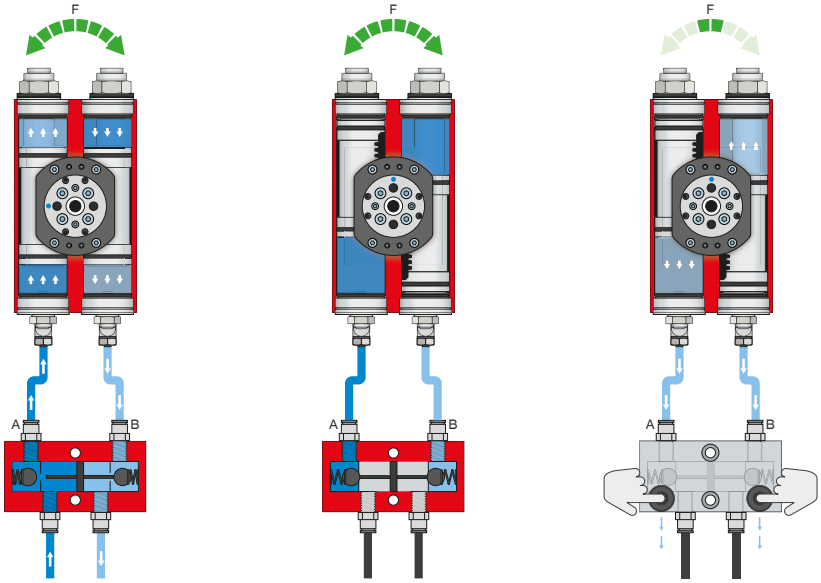

Pressure safety valve – DSV

Ensures safe retention of force and position if the system pressure drops

The integrated double check valve, which can be unlocked, retains the system pressure of the swivel unit in case of EMERGENCY STOP. To ensure the function, the valve must be installed as close to the swivel unit's air connection as possible. In variant E, two pushbuttons are installed that allow for controlled bleeding of the swivel unit.

SENSORS

MFS02

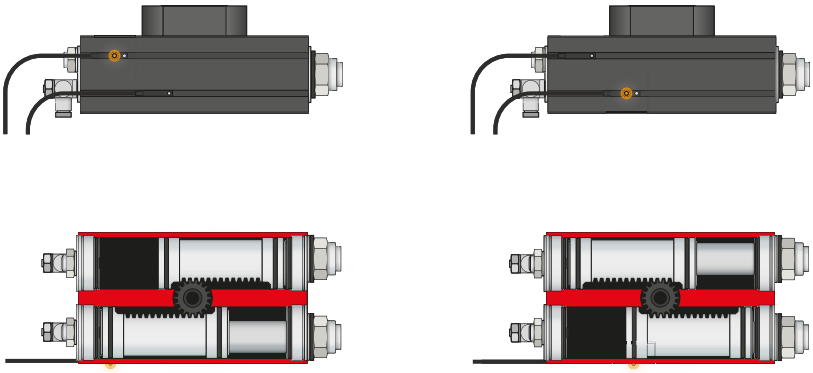

1-point magnetic field sensors – MFS

For non-contact sensing of the piston position

These sensors are clamped in the C-groove of the swivel unit and detect the magnet attached to the piston of the swivel unit. To ensure use in a wide variety of space conditions, the sensors are available in two versions. While the horizontal MFS02, with straight cable outlet, disappears into the C-groove of the swivel unit almost completely, the vertical MFS01 is taller, but has a cable outlet that is offset at an angle of 90°. The variants are available in versions with 5 m cables with exposed leads and 0,3 m cable with connector.

CONNECTIONS / OTHER

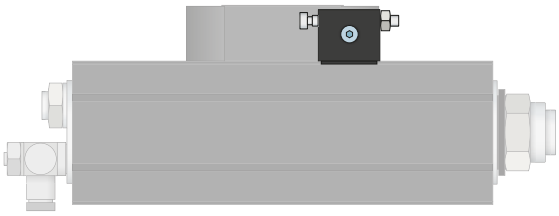

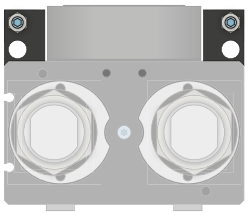

Attachment kit

The attachment kit is mounted on the pivot unit by the mounting hardware included in the scope of delivery and serves as an external stop. Thanks to the external stop, the force is dispersed through the housing and prevents the rack and pinion from being overloaded. The attachment kit also makes it possible to sense the end positions via inductive proximity switches.

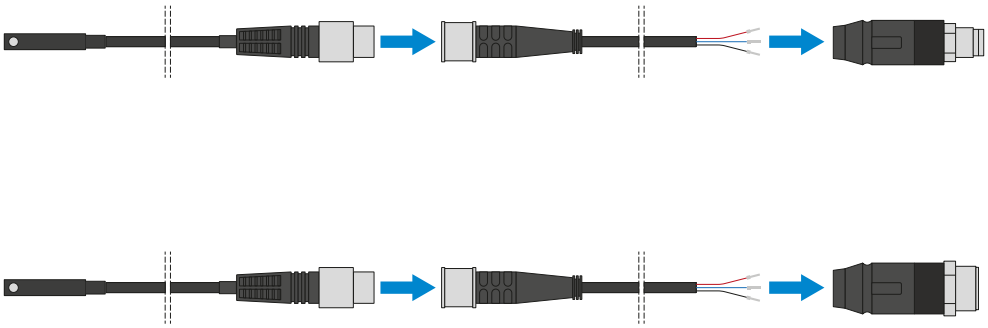

Plug-in connectors

For extending and fabricating the connection lines for the sensors

Cables with a length of 5 m with exposed leads are available. Depending on the specific needs, the cables can be shortened or fabricated with connectors in sizes M8 and M12.